chanhvinh.com

Rogowski Current Sensor
RC01 / RC03 / RC05 / RC07 - Series



Overview

Rogowski Coil RC-Series for AC current measurement. Wide application ranges from PCB mounted up to medium voltage versions. Available as shielded and un-shielded types.

Benefits:

- Wide dynamic measurement range with excellent linearity, no saturation effects and no upper current limit
- Very low phase displacement compared to conventional current transformers
- Customizable output signal, coil geometries & dimensions, cable length and connector interfaces

Features:

- Meets IEC 61869-10 Accuracy Class 1
- Phase error <0.03 degree @ 50 Hz / 60 Hz
- Linear Bandwidth up to 370 kHz
- Low influence from external AC magnetic fields
- Immune to DC current
- Low temperature coefficient

Applications

- Circuit Breaker
- Motor Protection Switch
- Gas Insulated Switchgear
- Smart Grid Monitoring
- Load Balancing & Power Quality Management
- Power Supplies for AI Servers
- Transformer Condition Monitoring
- Substation Applications
- Overhead Line Infrastructure

Rogowski Current Sensor
RC01 / RC03 / RC05 / RC07 - Series

YAGEO GROUP PULSE

Electrical Specifications

@ 25°C - Operating Temperature -20°C to +80°C

Description	Part Number	Sensitivity mV/kA			typ. Influence of external magnetic field *1)	typ. Influence of external electric field *2)	typ. Resonance frequence	typ. Temperature coefficient	Cable length	Weight
		50 Hz	60 Hz	Toler-ance	%	mA (@230VAC / 50 Hz)	kHz	ppm / K	mm	g
RC01-SSS-O										
Rogowski Coil Size 01 – 100 mV/kA	RC01-100	100	120	±1%	0,2	60	370	30	n.A.	7
Rogowski Coil Size 01 – 100 mV/kA - Shielded	RC01-100-S					25				
Rogowski Coil Size 01 – 200 mV/kA	RC01-200	200	240	±1%	0,2	40	200	25	n.A.	7
Rogowski Coil Size 01 – 200 mV/kA - Shielded	RC01-200-S					25				
Rogowski Coil Size 01 – 300 mV/kA	RC01-300	300	360	±1%	0,2	35	150	25	n.A.	7
Rogowski Coil Size 01 – 300 mV/kA - Shielded	RC01-300-S					25				
RC03-SSS-LLLL-O										
Rogowski Coil Size 03 – 200 mV/kA	RC03-200-0250	200	240	±1%	0,2	125	170	25	250 ± 15	23
Rogowski Coil Size 03 – 200 mV/kA - Shielded	RC03-200-0250-S					50				
Rogowski Coil Size 03 – 400 mV/kA	RC03-400-0250	400	480	±1%	0,2	85	90	6	250 ± 15	24
Rogowski Coil Size 03 – 400 mV/kA - Shielded	RC03-400-0250-S					45				
Rogowski Coil Size 03 – 600 mV/kA	RC03-600-0250	600	720	±1%	0,2	80	70	3	250 ± 15	25
Rogowski Coil Size 03 – 600 mV/kA - Shielded	RC03-600-0250-S					45				
RC05-SSS-LLLL-O										
Rogowski Coil Size 05 – 150 mV/kA	RC05-150-1000	150	180	±1%	0,2	140	110	28	1000 ± 50	65
Rogowski Coil Size 05 – 150 mV/kA - Shielded	RC05-150-1000-S					20				
Rogowski Coil Size 05 – 300 mV/kA	RC05-300-1000	300	360	±1%	0,2	110	60	25	1000 ± 50	67
Rogowski Coil Size 05 – 300 mV/kA - Shielded	RC05-300-1000-S					40				
Rogowski Coil Size 05 – 450 mV/kA	RC05-450-1000	450	540	±1%	0,2	80	45	21	1000 ± 50	69
Rogowski Coil Size 05 – 450 mV/kA - Shielded	RC05-450-1000-S					20				
RC07-SSS-LLLL-O										
Rogowski Coil Size 07 – 200 mV/kA	RC07-200-1800	200	240	±1%	0,33	700	250 220	50 25	1800 ± 50	182
Rogowski Coil Size 07 – 200 mV/kA - Shielded	RC07-200-1800-S					20				

chanhvinh.com

Mechanicals

RC01-SSS-O

Dimensions in mm

polarity +: Pin 1
polarity -: Pin 2
shielding: Pin 3

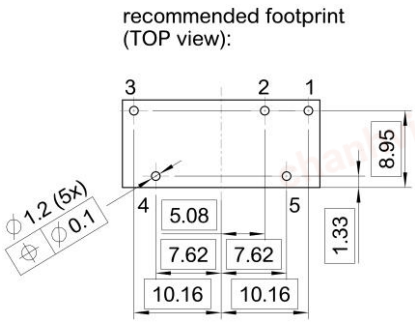

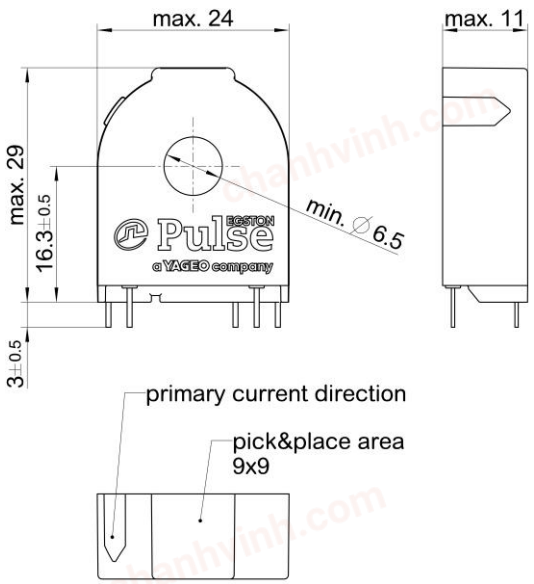

RC03-SSS-LLLL-O

Dimensions in mm

polarity +: yellow
polarity -: green
shielding: blue

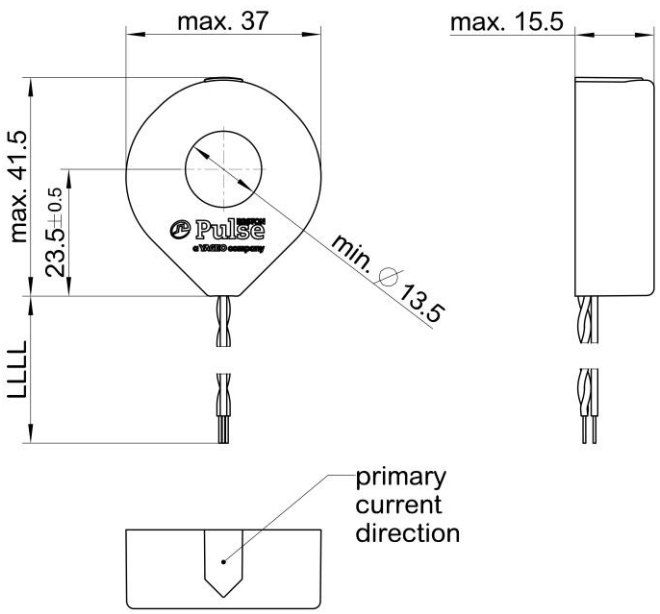

Rogowski Current Sensor
RC01 / RC03 / RC05 / RC07 - Series

Mechanicals

RC05-SSS-LLLL-O

Dimensions in mm

polarity +: red
polarity -: black
shielding: blank

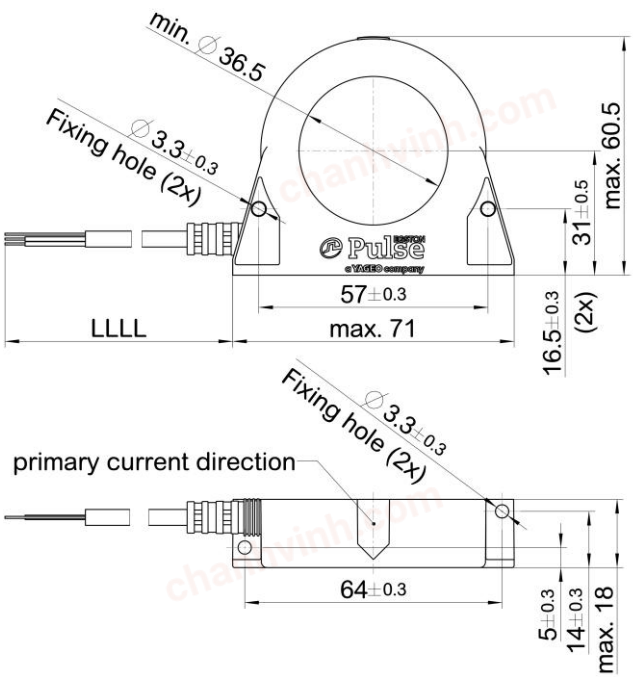

RC07-SSS-LLLL-O

Dimensions in mm

polarity +: red
polarity -: black
shielding: blank

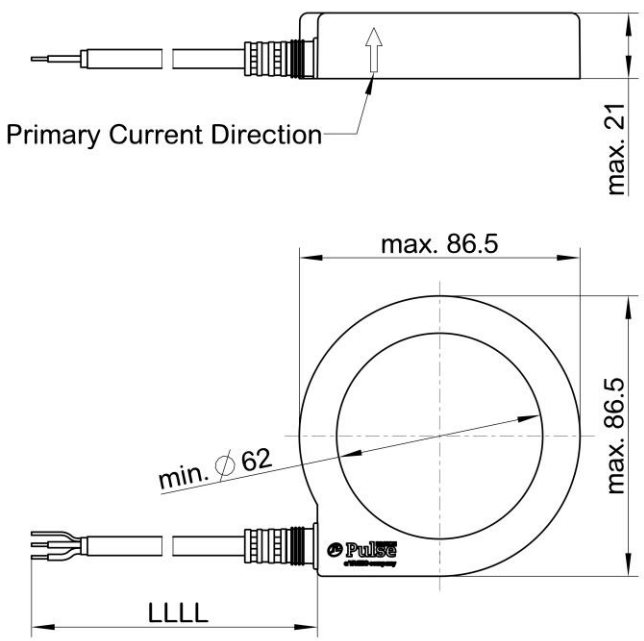

Influence

*1) of external magnetic field:

An external current conductor with specified diameter is close applied to the housing outline.

Tests will be done at the positions:
1) 90°
2) 270°

Test setup:

RC01:

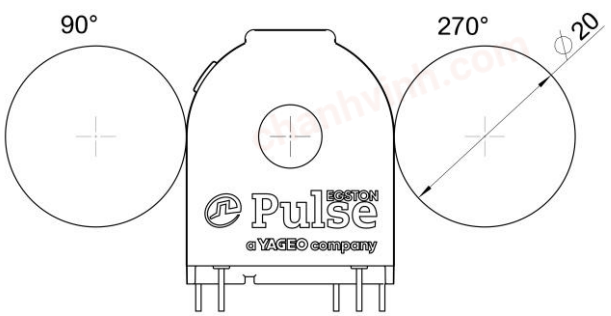

RC03:

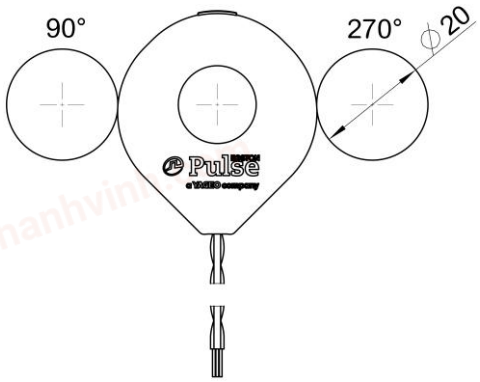

RC05:

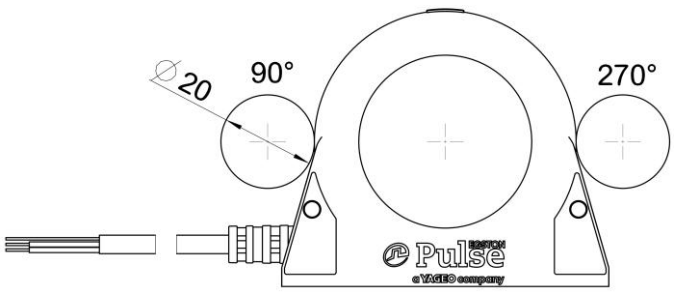

RC07:

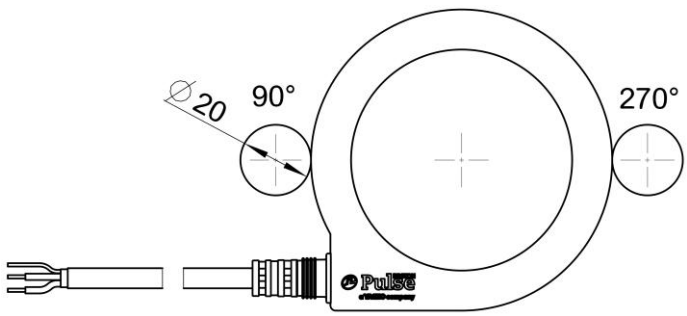

chanhvinh.com

Influence

*2) of external electric field:

A conductor is passed through the Rogowski coil, completely filling the coil. This conductor is supplied with a voltage of 230 V_{RMS} / 50 Hz, with no primary current, against earth. The capacitive coupling between the conductor and the Rogowski coil generates a voltage on the Rogowski coil. This voltage is converted into a current using the sensitivity of the Rogowski coil. This indicates the fault current induced by a voltage applied to the primary conductor at 230 V_{RMS} / 50 Hz.

Test setup:

RC01:

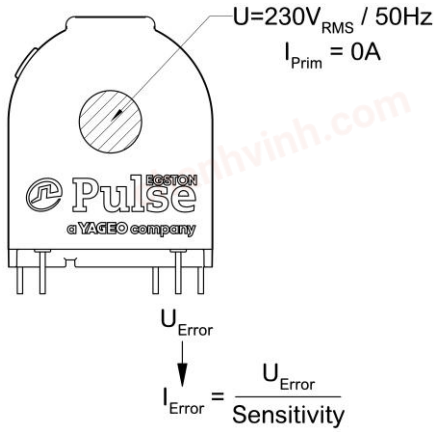

RC03:

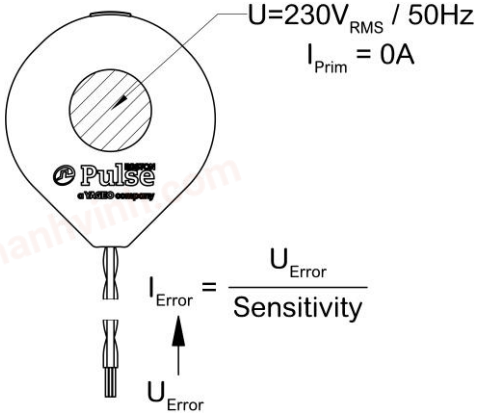

RC05:

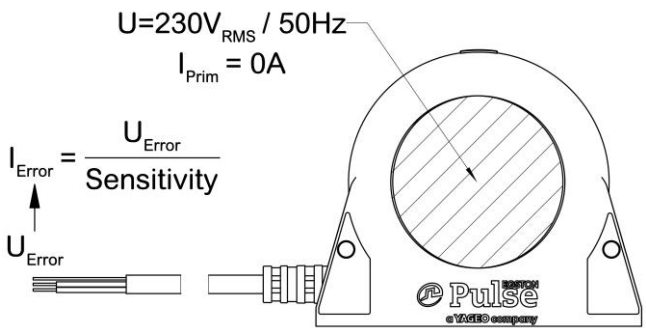

RC07:

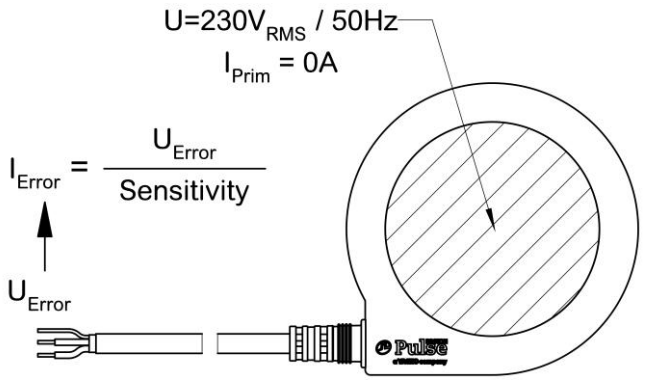

Rogowski Current Sensor
RC01 / RC03 / RC05 / RC07 - Series

Legend

Codification

RCXX – SSS – LLLL - O

RC:	XX:	SSS:	LLLL:	O: (Options)
Rogowski Coil	01: Size 01 03: Size 03 05: Size 05 07: Size 07	Sensitivity in mV/kA/50Hz	optional wire length in mm	S: with shielding

Customizable on request:

- output signal
- core shapes (e.g. oblong)
- lead wire length
- connectors
- certifications according to specific standards
- for RC05 & RC07: IP and outdoor rating

Also in our production scope:

- Combined current transformers (CCT), containing Rogowski coil and Energy harvester
- Integrator circuit for processing the signal of Rogowski coils
- Flexible Rogowski coils

For More Information: info.egston@yageo.com

Americas - prodinfo_network_americas@yageo.com | **Europe -** prodinfo_network_emea@yageo.com | **Asia -** prodinfo_network_asia@yageo.com

Performance warranty of products offered on this data sheet is limited to the parameters specified. Data is subject to change without notice. Other brand and product names mentioned herein may be trademarks or registered trademarks of their respective owners. © Copyright, 2025. YAGEO Group. All rights reserved.

YAGEO Corporation and its affiliates do not recommend the use of commercial or automotive grade products for high reliability applications or manned space flight.