chanhvinh.com

Isolation Power Transformers

UI5 Platform SMD PMT9085.XXXNLT Series

Pulse a YAGEO company





- *2W Push Pull/SiC & GaN drive Transformer*
- *Reinforced insulation, 6mm creepage & 4.5mm clearance[4]*
- *3KVrms Hi-Pot isolation voltage*
- *Up to 625Vpk rated voltage[5]*
- *Footprint: 10.4 x 9.0 x 6.6 mm MAX*

Electrical Specifications @ 25°C - Operating Temperature -40°C to +125°C

Part Number	Inductance (1-3) (mH min/typ)	Leakage Inductance (uH MAX)	Capacitance (pF MAX)	DCR (1-2)=(2-3) (Ω MAX)	DCR (4-5)=(5-6) (Ω MAX)	E*T(1-3)[1] (V*uSec)	Turns Ratio ±3.0%	Core Loss factor[3] K1	Hi-Pot Voltage (Vrms)
PMT9085.011NLT	0.6/1.0	3.9	20	0.96	1.08	60	1CT : 1CT	3.47	3000
PMT9085.012NLT	0.34/0.56	2.7	18	0.70	1.70	45	1CT : 2CT	4.63	
PMT9085.013NLT	0.15/0.25	1.15	17	0.48	1.57	30	1CT : 3CT	6.94	
PMT9085.015NLT	0.1/0.16	0.96	15	0.41	2.20	24	1CT : 5CT	8.68	
PMT9085.027NLT	0.1/0.16	0.96	17	0.41	1.43	24	2CT : 7CT	8.68	
PMT9085.034NLT	0.48/0.8	2.8	17	0.98	1.22	54	3CT : 4CT	3.86	
PMT9085.038NLT	0.12/0.2	0.98	16	0.43	1.30	27	3CT : 8CT	7.72	
PMT9085.047NLT	0.39/0.65	3.0	23	0.88	1.50	48	4CT : 7CT	4.34	
PMT9085.089NLT	0.39/0.65	2.5	18	0.75	1.00	48	8CT : 9CT	4.34	
PMT9085.311NLT	0.12/0.2	1.05	15	0.52	1.65	27	3CT : 11CT	7.72	

Notes:

1. The E*T rating limits the peak flux density to 2100 gauss (flux swing 4200 gauss). When used in bipolar drive applications, E*T should be limited to E*T max=0.05*(340-Temp*1.4)*E*T if temperature is in range of 100°C to 125°C.
2. For Push-Pull topology, where the voltage is applied across half the primary winding turns, the ET needs to be derated by 50% for the same flux swing.
3. The applied ET may need to be further derated for higher frequencies based on the temperature rise which results from the core and copper losses
   A. To calculate total copper loss (W), use the following formula:
   Copper Loss (W)=Irms_Primary^2*DCR_Primary+Irms_Secondary^2*DCR_Secondary
   B. To calculate total core loss (W), use the following formula:
   Core Loss (W)=1.0E-10*$f^{1.89}$*$(E*T*K1)^{2.1}$
   Where f is the working frequency in KHz, E*T is the voltage*times in V*uSecond, K1 is the Core Loss factor.
   C. To calculate temperature rise, use the following formula: Temperature Rise (°C) =200*(Core Loss(W)+Copper Loss (W))
4. Creepage and clearance is in accordance with IEC 61558-1 for reinforced insulation to a working voltage of 300Vms (for basic insulation to a working voltage of 600Vms) based on material group III, pollution degree 2, OVC II and 5000M altitude.
5. Rated voltage is based on a positive partial discharge test (discharge < 10pC) for the profile shown in page 3, in accordance with IEC60664 for basic insulation. In an application which requires a reinforced insulation barrier, a rated voltage of the equivalent peak voltage of the 300Vrms (sinusoidal) working voltage, 424Vpk, is defined and confirmed by partial discharge testing.

chanhvinh.com

Isolation Power Transformers

UI5 Platform SMD PMT9085.XXXNLT Series

Pulse a YAGEO company

Mechanical

Schematic

PMT9085.XXXNLT

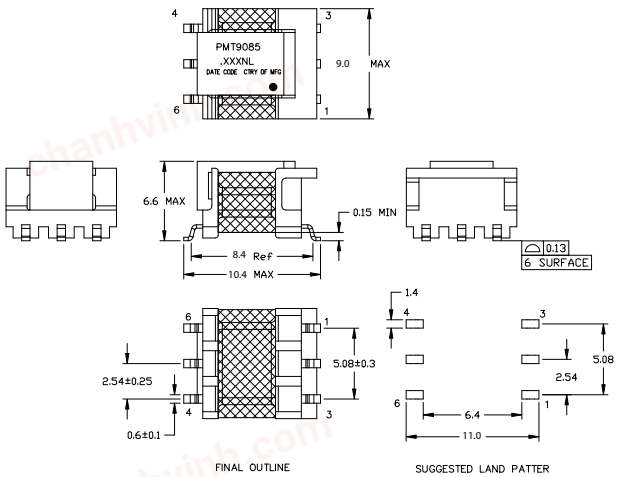

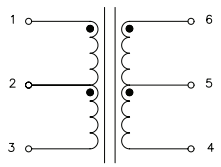

Weight 0.7grams

Dimensions: mm
Unless otherwise specified,
all tolerances are±0.25

TAPE & REEL INFO

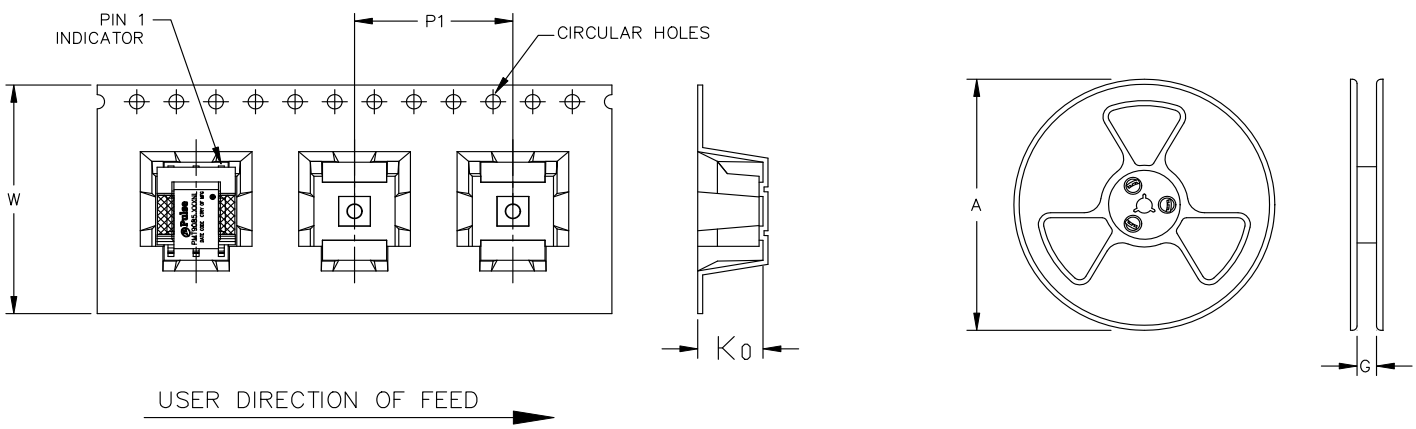

SURFACE MOUNTING TYPE, REEL/TAPE LIST						
PART NUMBER	REEL SIZE (mm)		TAPE SIZE (mm)			QTY
	A	G	P_1	W	K_0	PCS/REEL
PMT9085.XXXNLT	Ø330	24.4	16	24	6.5	500

chanhvinh.com

Partial Discharge Test Profile

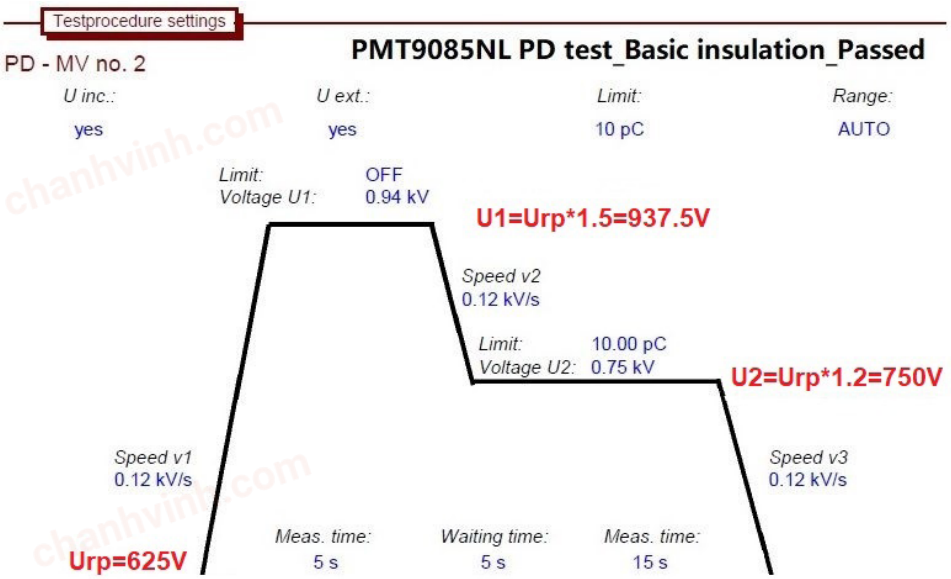

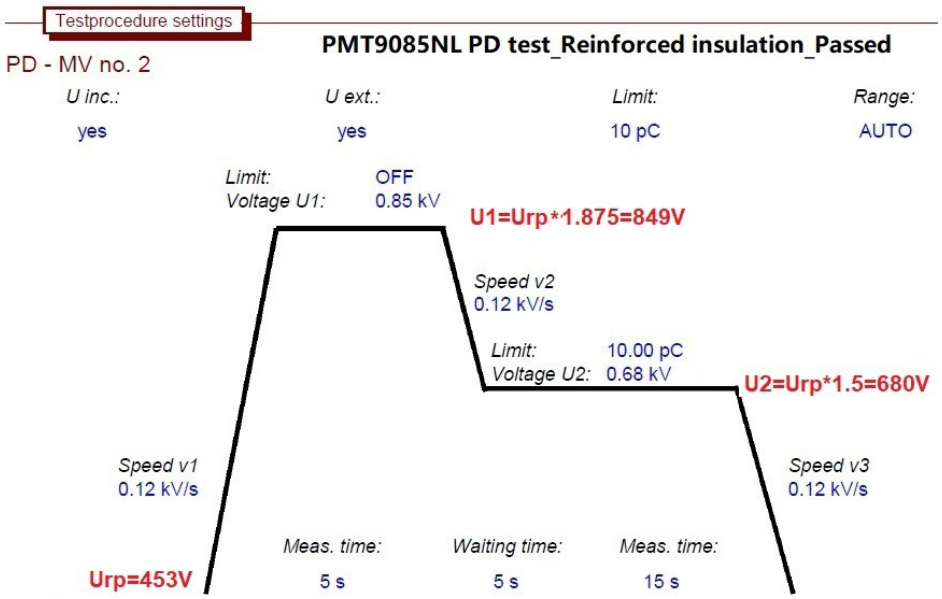

chanhvinh.com

Isolation Power Transformers

UI5 Platform SMD PMT9085.XXXNLT Series

APPLICATION

PMT9085.XXXNLT is an automotive grade Push-Pull transformer series, designed to deliver up to 2W of power across a high withstand voltage insulation barrier. It is compatible with a wide range push-pull drivers, such as the TI SN650x family, as part of a low cost solution for delivering isolation power from a low voltage source. A schematic diagram for the Push Pull converter topology is given below. For a fixed 50% duty cycle mode of operation, the output voltage is simply determined by the input voltage and turns ratio. So, with the available turns ratios, a variety of output voltages can be selected

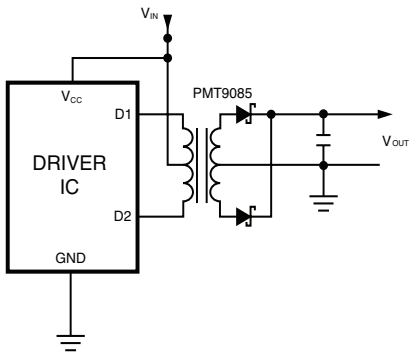

Additionally, it can be used in applications that incorporate SiC/GaN device switching for enhanced efficiency. This requires a negative voltage for robust device switch off. An adjustment of the above circuit achieves this negative voltage from the existing PMT9085 series, making both voltages available to a driver such as the TI UCC21530-Q1, as shown in the following configuration.

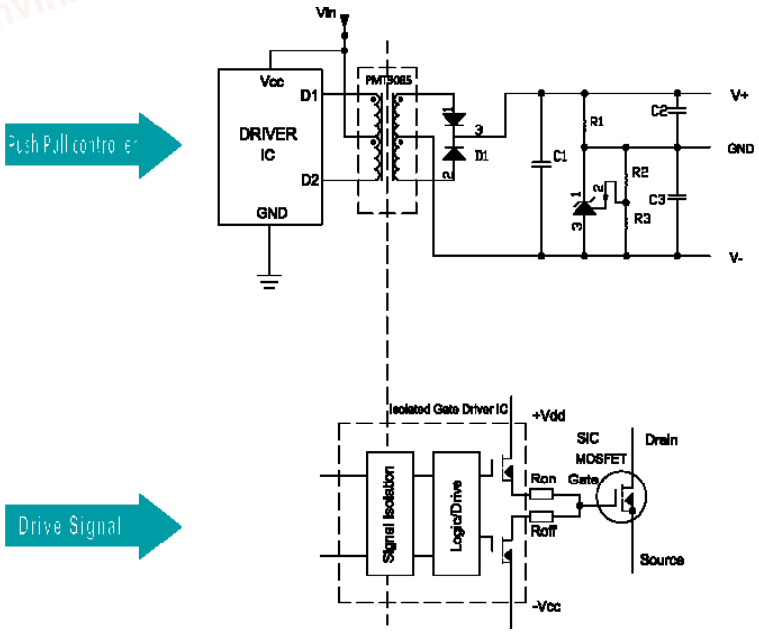

In addition to the providing galvanic isolation between the high-voltage and low-voltage sides, the purpose of the transformer is to satisfy the requirements of the relevant safety standards. PMT9085NL is designed to comply with the requirements of IEC61558-1 for basic and reinforced insulation. With 6.4mm creepage distance and based on material group III, OVCII and 5000m altitude, this corresponds to a maximum working voltage of 600Vrms for basic insulation and 300Vrms for reinforced insulation. Contact your Pulse Electronics representative for queries in relation to safety requirements.

For More Information:

Americas - prodinfo_power_americas@yageo.com | **Europe -** prodinfo_power_emea@yageo.com | **Asia -** prodinfo_power_asia@yageo.com

Performance warranty of products offered on this data sheet is limited to the parameters specified. Data is subject to change without notice. Other brand and product names mentioned herein may be trademarks or registered trademarks of their respective owners. © Copyright, 2023. Pulse Electronics, Inc. All rights reserved.

YAGEO Corporation and its affiliates do not recommend the use of commercial, automotive, and/or COTS grade products for high reliability applications or manned space flight.