chanhvinh.com

High Isolation Power Transformers
Extended Creepage Toroidal Platform SMD – PTPA Series



- *Push Pull Transformer*
- *Reinforced insulation for isolated power supply driver*
- *17.6mm creepage and 13mm clearance*
- *5KVrms isolation (Up to 1500Vpk rated voltage)*[5]
- *Automotive compatible* [6]

Electrical Specifications @ 25°C – Operating Temperature -40°C to +125°C

Part Number	Inductance (1-2) (µH Min)	Leakage Inductance[3] (µH MAX)	DCR (1-2)=(3-4) (Ω MAX)	DCR (5-6)=(7-8) (Ω MAX)	ET MAX (1-2)[1] (V-µsec MAX)	CAP[3] (pF MAX)	Turns Ratio[3] (1-4) :(8-5)	Isolated Voltage (Vrms)
PMT6397.011NLT	140	12.0	0.70	0.7	54	8.0	1CT : 1CT	5000
PMT6397.013NLT	70	7.0	0.50	1.2	38	7.5	1CT : 3CT	
PMT6397.034NLT	115	11.0	0.65	0.75	48	7.0	3CT : 4CT	

Notes:

1. The ET Max is calculated to limit the core loss and temperature rise at 300KHz based on a bipolar flux swing of 180mT Peak.
2. The applied ET may need to be further derated for higher frequencies based on the temperature rise which results from the core and copper losses
   A. To calculate total copper loss (W), use the following formula:
   Copper Loss (W) = Irms_Primary^2 * DCR_Primary + Irms_Secondary^2*DCR_Secondary
   B. To calculate total core loss (W), use the following formula:
   Core Loss (W) = $6.74*10^{-11}$ * (Frequency in kHz)$^{1.38}$ * (180 * [ET/ET Max])$^{2.864}$
   Where ET is the applied Volt Second, ET Max is the rated Volt Second for 180mT flex swing
   C. To calculate temperature rise, use the following formula:
   Temperature Rise (°C) = 93 * (Core Loss(W) + Copper Loss (W))
3. Leakage Inductance : (1-4) with (5-8) shorted, 2,3 & 6, 7 tied. Capacitance : 1,3 to 6,8. Turns Ratio : with 2,3 & 6,7 tied. Otherwise a approve for production release.
4. Creepage and clearance is in accordance with IEC 61558-1 and IEC61558-2-16 for reinforced insulation to a working voltage of 880Vrms (for basic insulation to a working voltage of 1760Vrms) based on material group III, pollution degree 2, OVC II and 5000m altitude.
5. Rated voltage is based on a positive partial discharge test (discharge < 10pC) for the profile shown in page 3, in accordance with IEC60664 for basic insulation. In an application which requires a reinforced insulation barrier, a rated voltage of 1200Vpk is defined and confirmed by partial discharge testing.
6. This series is automotive ready, but has not completed AEC-Q200 qualification testing. Please contact your Yageo representative to discuss your IATF or other turns ratio requirements

Mechanical

PMT6397.XXXNLT

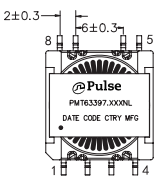

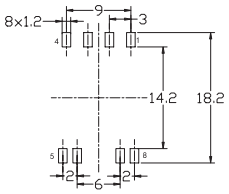

SUGGESTED LAND PATTERN

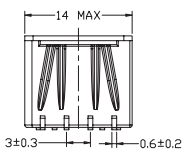

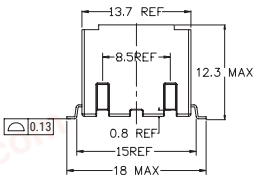

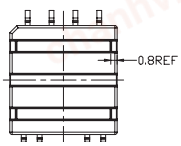

Schematic

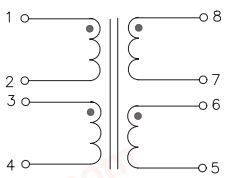

SCHEMATIC

Weight 3.9grams
Tape & Reel 150/reel

Dimensions: Inches / mm

Unless otherwise specified, all tolerances are ± .010 / 0,25

chanhvinh.com

TAPE & REEL INFO

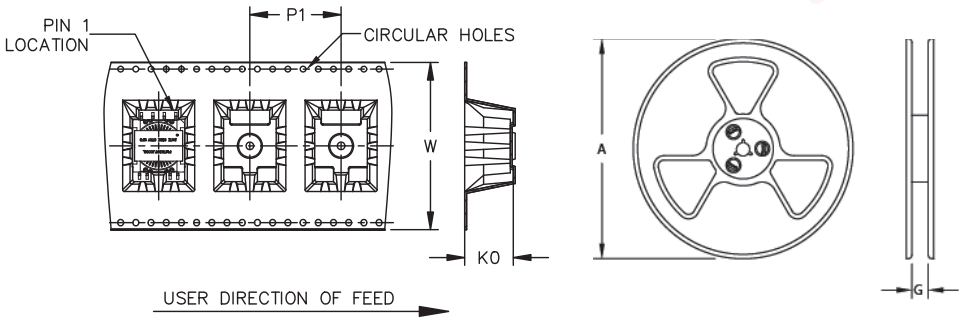

SURFACE MOUNTING TYPE, REEL/TAPE LIST						
PART NUMBER	REEL SIZE (mm)		TAPE SIZE (mm)			QTY
	A	G	P_1	W	K_0	PCS/REEL
PMT6397.XXXNLT	Ø330	44.4	24	44	12.8	150

APPLICATION

PMT6397.XXXNL is a series of high isolation power supply transformer drivers. Intended to operate in a fixed duty cycle Push Pull topology, it is a part of a low cost solution for delivering lower power (up to 3W) from a low voltage source. A typical implementation would be an isolated automotive power supply driver circuit, the design is compatible with the TI SN6501-Q1, along with many other automotive grade push pull drivers.
A schematic diagram for the Push Pull converter topology is given below.

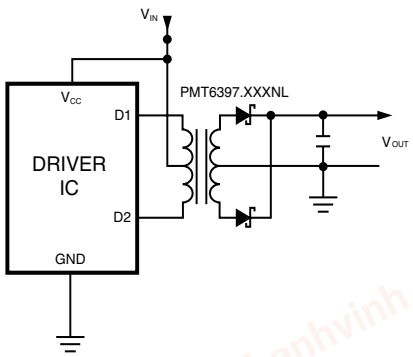

For a fixed 50% duty cycle mode of operation, the output voltage is simply determined by the input voltage and turns ratio. The 1:3 ratio ratio is intended to deliver up to 15V from a 5V source. Other turns ratios can be made available on request.
The distinguishing feature of the PMT6397 series is the segmented winding on the toroidal core. In addition to providing the reinforced insulation, the triple insulated wire in this winding construction provides enhanced electrical isolation, offering up to 1500Vpk rated voltage, making it suitable for high battery voltage automotive applications.

High Isolation Power Transformers
Extended Creepage Toroidal Platform SMD – PTPA Series

Test Procedure Setting — Basic Insulation - Partaial Discharge Test Passed

PD - MV no.2

U inc.:	U ext.:	Limit:	Range:
yes	yes	10 pC	AUTO

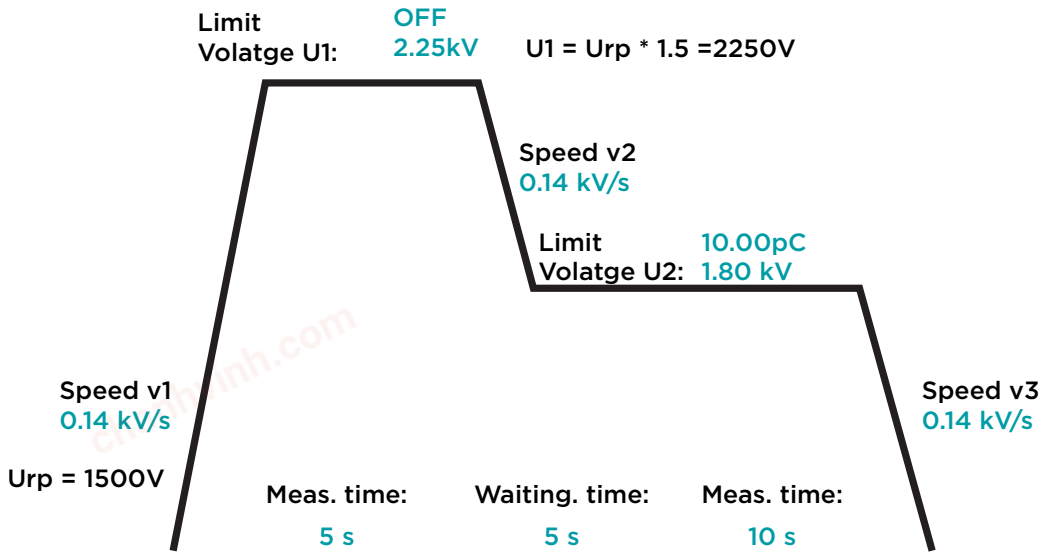

Test Procedure Setting — Reinforced Insulation - Partaial Discharge Test Passed

PD - MV no.2

U inc.:	U ext.:	Limit:	Range:
yes	yes	10 pC	AUTO

