chanhvinh.com

SMT Power Inductors

High Current Composite Inductor - PA5432.XXXNLT and PM5432.XXXNLT

Pulse a YAGEO company



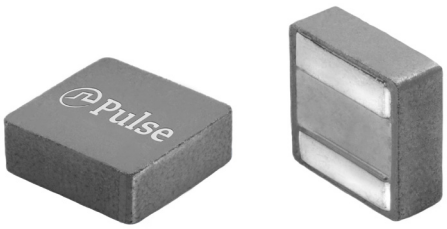

- ***Height:*** *6.0mm Max*
- ***Footprint:*** *6.8mm x 6.6mm Max*
- ***Current Rating:*** *up to 10.5Arms*
- ***Inductance Range****: 4.7uH to 22uH*
- *High current, low DCR, and high efficiency*
- *High reliability*
- *Minimized acoustic noise and minimized leakage flux noise*
- *Available in Commercial (PA5432) and Automotive (PM5432) grades*

Electrical Specifications @ 25°C, Operating Temperature -55°C to +155°C

Part Number		▽Inductance 100KHz, 0.1V	Rated[4] Current	DC Resistance		Saturation Current[2] (25°C)	Heating Current	SRF	K Factor for Core Loss
Commerical[7]	Automotive[7]			TYP.	MAX.	TYP.	ΔT ≈ 40°C	TYP.	
		uH±20%	A	mΩ	mΩ	A	A	MHz	
PA5432.472NLT	PM5432.472NLT	4.7	10.5	13.10	14.4	10.5	11	21	49.2
PA5432.562NLT	PM5432.562NLT	5.6	9.9	14.46	15.9	9.9	10	20	39.9
PA5432.682NLT	PM5432.682NLT	6.8	9	18.90	20.8	9.2	9	18	39.9
PA5432.822NLT	PM5432.822NLT	8.2	8	24.00	26.4	8.4	8	16	35.4
PA5432.103NLT	PM5432.103NLT	10	7	27.00	29.82	7.6	7	14	31.8
PA5432.153NLT	PM5432.153NLT	15	6	39.77	43.75	5.8	6	11	-
PA5432.223NLT	PM5432.223NLT	22	5	55.12	60.63	5.6	5	9	-

Notes:

1. Actual temperature of the component during system operation (ambient plus temperature rise) must be within the standard operating range.
2. The saturation current is the current at which the initial inductance drops by approximately 30% at the stated ambient temperature. The maximum allowable drop at this stated current is 40% of the initial inductance. This current is determined by placing the component in the specified ambient environment and applying a short duration pulse current (to eliminate self-heating effect) to the component.
3. The Heating current is the DC current required to raise the component temperature by approximately 40 ° C. Take note that the components' performanc varies depending on the system condition. It is suggested that the component be tested at the system level, to verify the temperature rise of the component during system operation.
4. The rated current as listed is either the saturation current or the heating current (Δ T ≈ 40°C) depending on which value is lower.
5. The part temperature (ambient+temp rise) should not exceed 155 ° C under worst case operating conditions. Circuit design, PCB trace size and thickness, airflow and other cooling provisions all affect the part temperature. Part temperature should be verified in the end application.
6. Parts shown in bold are standard catalog parts and are available through sample stock and distribution. Parts in lighter font are available but are not necessarily held in sample stock or distribution and lead times may be longer. Please contact Pulse for availablity.
7. The PM5432.XXXNLT part numbers are also IATF16949 certified. The mechanical dimensions are100% tested in production but do not necessarily meet a product capability index (Cpk) 1.33 and therefore the PM5432.XXXNLT may not strictly conform to PPAP.
8. Special Characteristics ▽

chanhvinh.com

SMT Power Inductors

High Current Composite Inductor - PA5432.XXXNLT and PM5432.XXXNLT

Pulse a YAGEO company

Mechanical

PA5432.XXXNLT and PM5432.XXXNLT

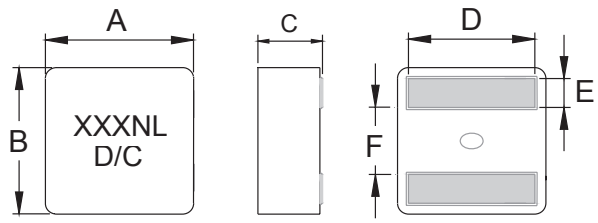

FINAL LAYOUT

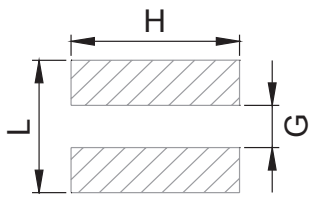

SUGGESTED PAD LAYOUT

Series	A	B	C	D	E	F	L	G	H
PA5432/PM5432	6.6±0.2	6.4±0.2	5.8±0.2	5.3±0.3	1.4±0.2	2.6±0.25	6.3(REF)	2.5 (REF)	5.6 (REF)

All Dimensions in mm.

TAPE & REEL INFO

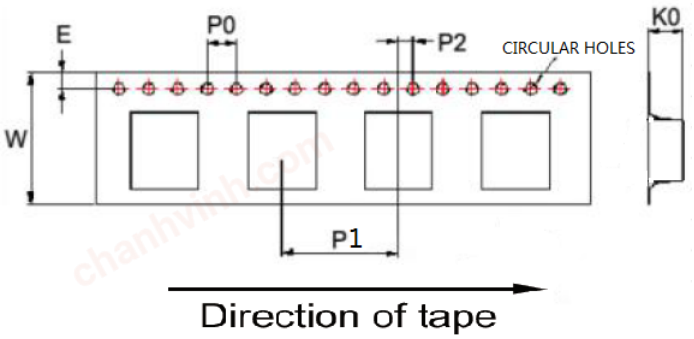

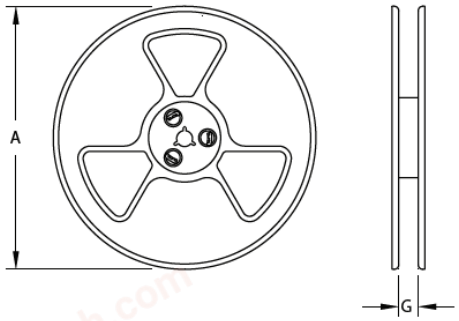

SURFACE MOUNTING TYPE, REEL/TAPE LIST						
	REEL SIZE (mm)		TAPE SIZE (mm)			QTY
	A	G	P_1	W	K_0	PCS/REEL
PA5432/PM5432	Ø330	16.4	12	16	6.3	750

chanhvinh.com

CORE LOSS vs FLUX DENSITY

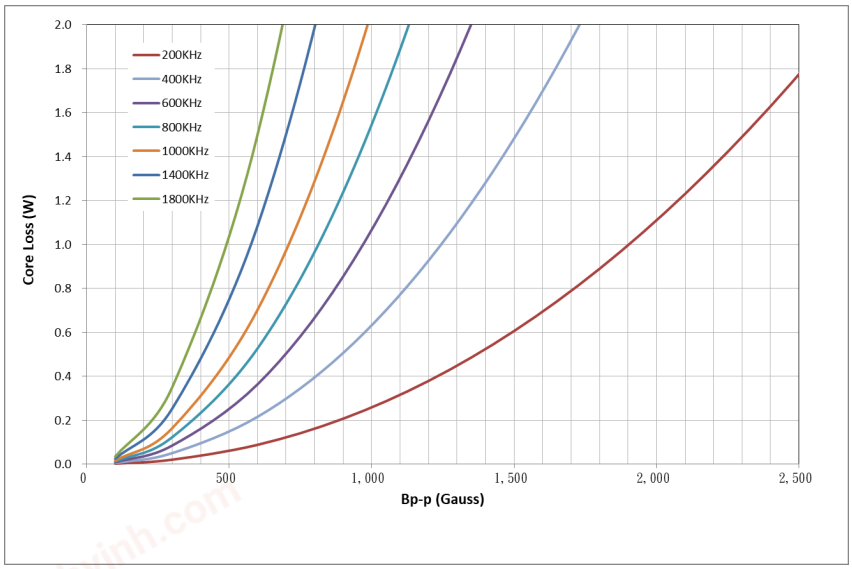

Bp-p = K *L(uH) *delta I(A)

Performance warranty of products offered on this data sheet is limited to the parameters specified. Data is subject to change without notice. Other brand and product names mentioned herein may be trademarks or registered trademarks of their respective owners. © Copyright, 2020. Pulse Electronics, Inc. All rights reserved.