chanhvinh.com

Isolation Power Transformers

Toroid Platform SMD PH9384.XXXNL and PM2185.XXXNL

Pulse a YAGEO company

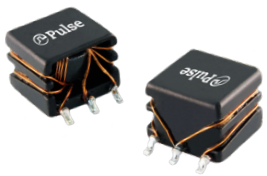

- *Push Pull Converter Transformer*
- *Reinforced Insulation (IEC62368-1), UL 60950-1 Certified*
- *8mm Creepage and Clearance*
- *4KVrms Isolation (850 Vpk rated voltage)*[5]
- ***Patented:*** *US Pat 9,646,755*

Electrical Specifications @ 25°C – Operating Temperature -40°C to +125°C

Part Number		Inductance (1-3) (µH ±35%)	Leakage Inductance (1-3) with (4-6) shorted (µH MAX)	Capacitance (1, 2, 3) to (4, 5, 6) (pF MAX)	DCR (1-3) (Ω MAX)	DCR (4-6) (Ω MAX)	MAX (1-3)[1] (V-µsec Max)	Turns Ratio (1:3) (6:4)	Isolated Voltage (Vrms)
Commerical	Automotive[3]								
PH9384.011NL	PM2185.011NL	538	0.8	20	0.30	0.40	24	1CT : 1CT	4000
PH9384.012NL	PM2185.012NL	538	0.6	30	0.33	0.65	24	1CT : 2CT	
PH9384.021NL	PM2185.021NL	538	1.6	15	0.30	0.25	24	2CT : 1CT	
PH9384.034NL	PM2185.034NL	680	0.6	30	0.35	0.52	27	3CT : 4CT	
PH9384.035NL	PM2185.035NL	680	0.7	30	0.35	0.65	27	3CT : 5CT	
PH9384.038NL	PM2185.038NL	538	0.7	30	0.40	0.90	27	3CT : 8CT	
PH9384.043NL	PM2185.043NL	538	0.8	20	0.30	0.30	24	4CT : 3CT	
PH9384.083NL	PM2185.083NL	538	2.0	15	0.30	0.22	24	8CT : 3CT	
PH9384.089NL	PM2185.089NL	538	0.6	30	0.30	0.42	24	8CT :9CT	

Notes:

1. The ET Max is calculated to limit the core loss and temperature rise at 200KHz based on a bipolar flux swing of 210mT Peak. This value needs to be derated for higher frequencies using the temperature rise calculation to remain with operating temperature range.
2. A. To calculate total copper loss (W), use the following formula:
   Copper Loss (W) = Irms_Primary^2 * DCR_Primary + Irms_Secondary^2*DCR_Secondary
   B. To calculate total core loss (W), use the following formula:
   Core Loss (W) = 2.31E-11* (Frequency in kHz)$^{1.68}$*(210 * [ET/ET Max])$^{2.55}$
   Where ET is the applied Volt Second, ET Max is the rated Volt Second for 210mT flux swing
   C. To calculate temperature rise, use the following formula:

   Temperature Rise (°C) = 130 * (Core Loss(W) + Copper Loss (W))
3. For Push-Pull topology, where the voltage is applied across half the primary winding turns, the ET needs to be derated by 50% for the same flux swing.
4. Creepage and clearance is in accordance with IEC 61558-1 and IEC61558-2-16 for reinforced insulation to a working voltage of 300Vrms (for basic insulation to a working voltage of 800Vrms) based on material group III, pollution degree 2, OVC II and 5000m altitude.
5. 850Vpk rated voltage is based on a positive partial discharge test (discharge < 10pC), in accordance with IEC60664 for basic insulation. In an application which requires a reinforced insulation barrier, a rated voltage of 650Vpk is defined and confirmed by partial discharge testing.

Mechanical

PH9384.XXXNL and PM2185.XXXNL

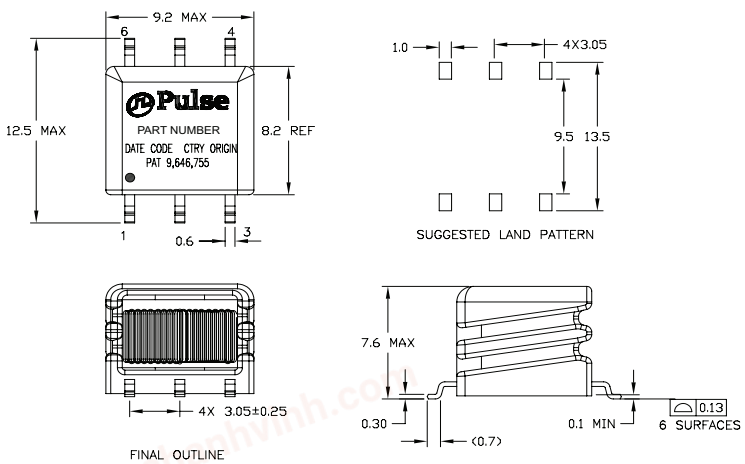

Schematic

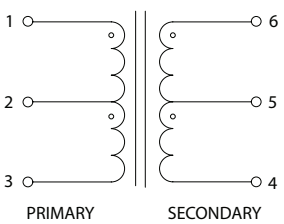

Weight 0.85grams
Tape & Reel 400/reel
Tray 55/tray

Dimensions: mm
Unless otherwise specified,
all tolerances are: ±0.25

chanhvinh.com

Isolation Power Transformers

Toroid Platform SMD PH9384.XXXNL and PM2185.XXXNL

TAPE & REEL INFO

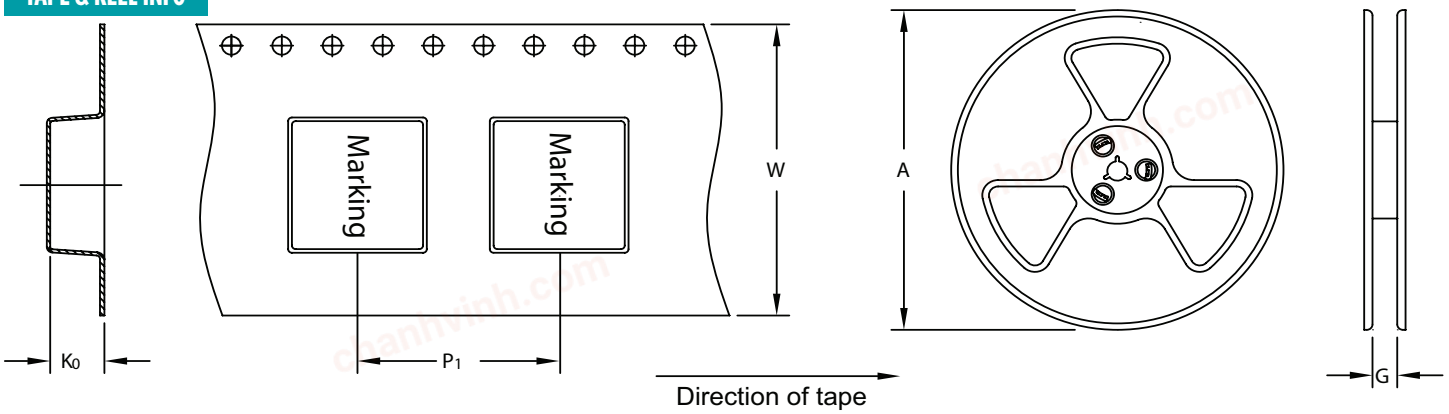

SURFACE MOUNTING TYPE, REEL/TAPE LIST						
PART NUMBER	REEL SIZE (mm)		TAPE SIZE (mm)			QTY
	A	G	P_1	W	K_0	PCS/REEL
PH9384.XXXNLT/PM2185.XXXNLT	Ø330	24.4	16	24	8.2	400

APPLICATION

PH9384/PM2185 are Push-Pull transformer series, designed to deliver up to 3W of power across a high withstand voltage insulation barrier. It is compatible with a wide range push-pull drivers, such as the TI SN650x family, as part of a low cost solution for delivering isolation power from a low voltage source. A schematic diagram for the Push Pull converter topology is given below. For a fixed 50% duty cycle mode of operation, the output voltage is simply determined by the input voltage and turns ratio. So, with the available turns ratios, a variety of output voltages can be selected

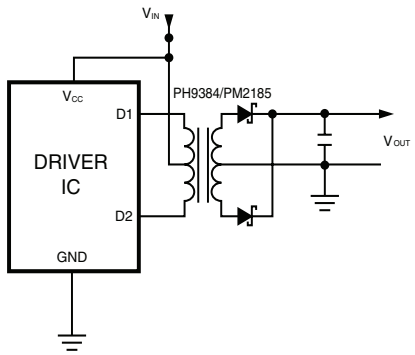

PH9384.034NL has been certified by UL to comply with UL60950-1 2 edition with reinforced insulation for a working voltage up to 300Vac. The remainder of the PH9384.XXXNL series was not included in the UL certification but are fully complaint with the requirements for reinforced insulation. Based on VDE approval of FIW wire under IEC60317-0-7, IEC60317-36 and IEC60851-5:2008, IEC62368-1 accepts the current construction of the PH9384/PM2185 series as fulfilling the requirements of reinforced insulation for a working voltage up to 300Vac/420Vpeak.

For More Information:

Americas - prodinfo_power_americas@yageo.com | **Europe -** prodinfo_power_emea@yageo.com | **Asia -** prodinfo_power_asia@yageo.com

Performance warranty of products offered on this data sheet is limited to the parameters specified. Data is subject to change without notice. Other brand and product names mentioned herein may be trademarks or registered trademarks of their respective owners. © Copyright, 2023. Pulse Electronics, Inc. All rights reserved.

YAGEO Corporation and its affiliates do not recommend the use of commercial or automotive grade products for high reliability applications or manned space flight.