chanhvinh.com

# High Isolation Power Transformer

*Shaped Core Platform SMD*

Pulse a YAGEO company



- *Flyback Converter Transformer*
- *Designed for Broadcom ACPL-32JT and ACPL-302J IGBT Gate Driver*
- *Compact and cost effective industrial design*
- *PH9363NL: Basic insulation, 2.8mm creepage*
- *PH9496NL: Basic insulation, 6.2mm creepage*
- *PH0416NL: Reinforced insulation, 8.3mm creepage*
- *PM2277NLT: Basic Insulation, 6.2mm creepage; 10G vibration*

**Electrical Specifications @ 25°C – Operating Temperature -40°C to +125°C**

| Commercial | Automotive | Inductance (Pri) (µH ±10%) | Primary Current (A MAX) | Inductance (Sec) (µH ±10%) | DCR (Sec) (Ω MAX) | Leakage Inductance (Pri) (µH Max) | Turns Ratio | Isolated Voltage (Vrms) |
|---|---|---|---|---|---|---|---|---|
| **PH9363NL** | **n/a** | 60 | 1.0 | 240 | 0.60 | 3.0 | 1:2 | 2500 / 1 minute |
| **PH9496NL** | **PM2277NLT** | 52 | 1.7 | 332 | 0.22 | 1.2 | 1:2.53 | 2500 / 1 minute |
| **PH0416NL** | **n/a** | 43 | 1.0 | 172 | 1.2 | 2 | 1:2 | 5000 / 1 minute |

**Notes:**

1. These transformers are approved by Broadcom to deliver a isolated 18V IBGT drive voltage from a 8V-18V source.
2. Optional Tape & Reel packing can be ordered by adding a "**T**" suffix to the part number.
3. Other turns ratios and isolation levels available on request.
4. The rated primary current is based on a peak flux density of 220mT.
5. PM2277 is automotive grade

## Mechanical

### PH9363NL

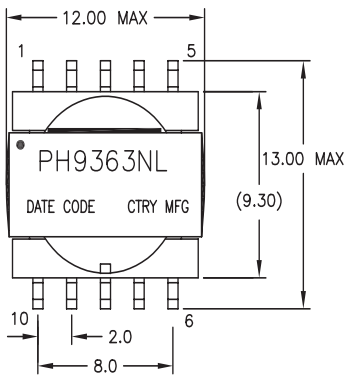


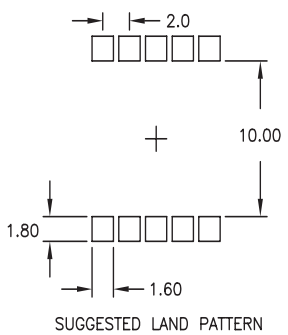


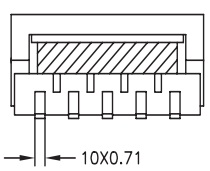


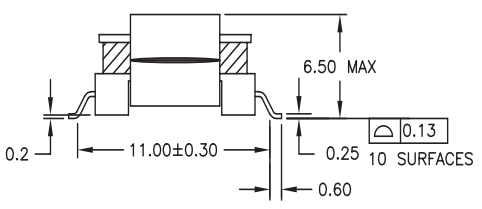


## Schematic

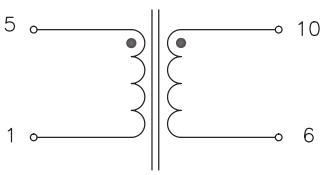


**Weight** .....1.4grams
**Tape & Reel** .....500/reel
**Tray** .....100/tray

**Dimensions: mm**

Unless otherwise specified, all tolerances are±0.25

chanhvinh.com

# High Isolation Power Transformer

*Shaped Core Platform SMD*

Pulse a YAGEO company

## PH9496NL

### Mechanical

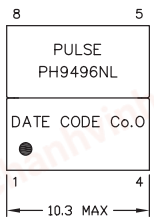


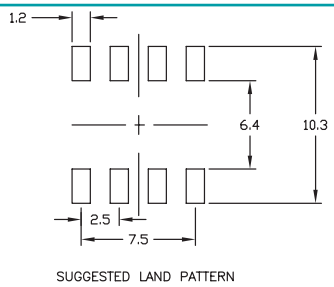


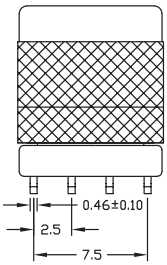


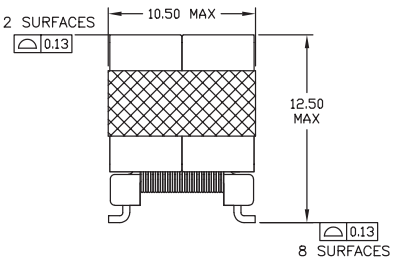


### Schematic

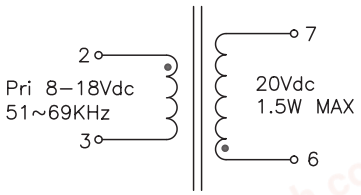


**Weight** .....2.6grams
**Tape & Reel** .....175/reel
**Tray** .....90/tray
**Dimensions: mm**

Unless otherwise specified,
all tolerances are±0.25

## PH0416NL

### Mechanical




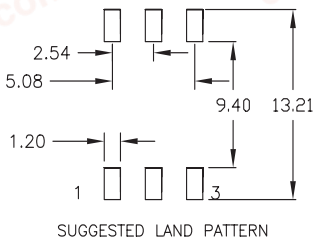


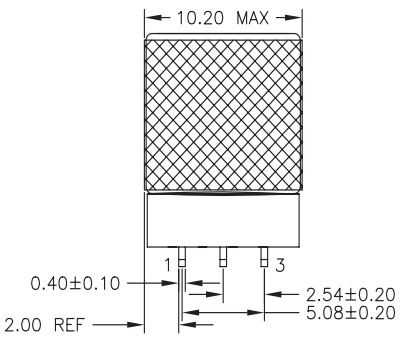


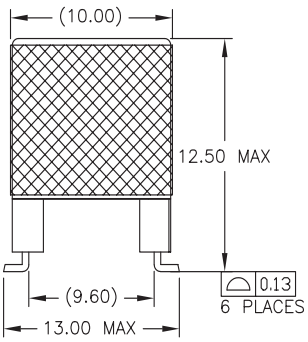


### Schematic

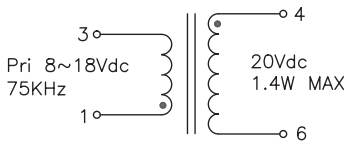


**Weight** .....2.6grams
**Tape & Reel** .....150/reel
**Tray** .....80/tray
**Dimensions: mm**

Unless otherwise specified,
all tolerances are±0.25

chanhvinh.com

# High Isolation Power Transformer

*Shaped Core Platform SMD*

Pulse a YAGEO company

## Mechanical

## Schematic

**PM2277NL**

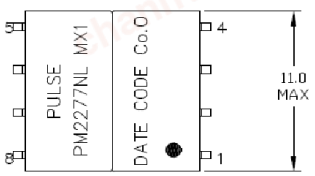


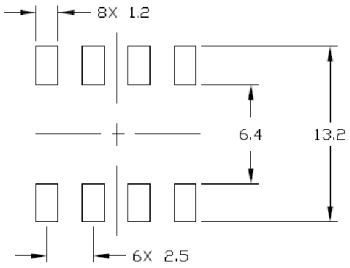


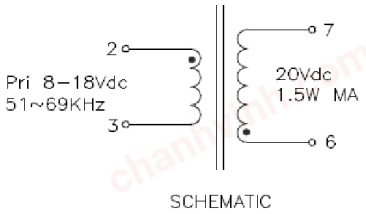


SCHEMATIC

**Weight** .....3.4grams
**Tape & Reel** .....175/reel

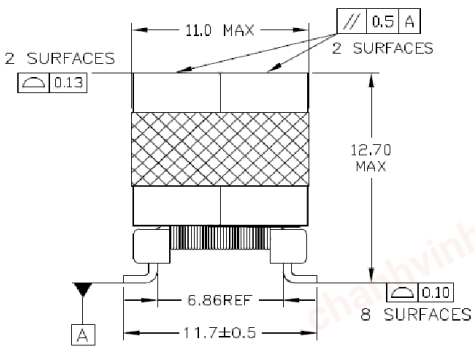


SUGGESTED LAND PATTERN

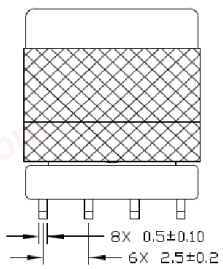


## For More Information

**Americas -** prodinfo_power_americas@yageo.com | **Europe -** prodinfo_power_emea@yageo.com | **Asia -** prodinfo_power_asia@yageo.com

Performance warranty of products offered on this data sheet is limited to the parameters specified. Data is subject to change without notice. Other brand and product names mentioned herein may be trademarks or registered trademarks of their respective owners. © Copyright, 2023. Pulse Electronics, Inc. All rights reserved.

YAGEO Corporation and its affiliates do not recommend the use of commercial or automotive grade products for high reliability applications or manned space flight.