chanhvinh.com

Power Beads - PGL725XHLT Series
Coupled Inductor

Pulse
a YAGEO company

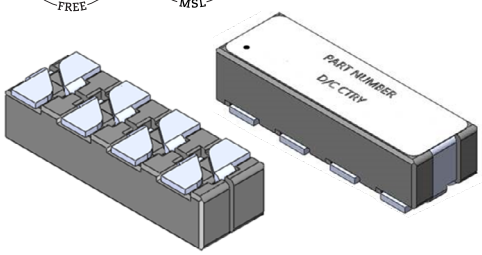

Features and Benefits:

- *High current multi-phase coupled inductor*
- *Max height 6mm*
- *Ferrite core material*
- *Operating frequency range: ~3MHz*
- *For use with ADI/Maxim Integrated Products Multi - Phase Controllers*

Electrical Specifications @ 25°C – Operating Temperature -40°C to +125°C

Part Number	Heating current per phase (A)	OCL @ 0 Ade (nH±20%)				OCL @ Isat 1&2 (nH MIN)	Isat1 @ 25°C (A)	*Isat2 @ 105°C (A TYP)	DCR (m Ω) Max.	SCL @ 0 Adc (nH)	SCL @ Isat 3 (nH MIN)	Isat3 @ 105°C (A)
		PHASE 1 2-1	PHASE 2 4-3	PHASE 3 6-5	PHASE 4 8-7							
PGL7252HLT	40	170	170	\	\	110	24	20	0.25	35±20%	22	*100
PGL7253HLT	40	170	180	170	\	110	24	20	0.25	35±20%	22	*100
PGL7254HLT	40	170	180	180	170	110	24	20	0.25	35±20%	22	*100

Notes:

1. Open circuit inductance (OCL) test parameters: 1MHz, 0.1V, 0Adc.
2. Isat 1 & Isat 2 for OCL, Isat3 for SCL are the DC current which cause the inductance drops by 20% TYP.
3. Short circuit inductance (SCL):
   A. PGL7252HLT: Measure (2-3) with shorted (1,4), and divide by 2.
   B. PGL7253HLT: Measure (2-5) with shorted (1,4) , (3,6), and divide by 3.
   C. PGL7254HLT: Measure (2-7) with shorted (1,4), (3,6), (5,8) and divide by 4.
4. The items on indicated * are guaranteed by design and verified by design stage. Will not test for production.
5. The heating current, or rms current, per phase is calculated to produce a 45°C rise above the ambient temperature.
6. IIn high volt*time applications, additional heating in the component can occur due to core losses in the inductor which may neccessitate derating the current in order to limit the temperature rise of the component. To determine the approximate total losses (or temperature rise) for a given application, the coreloss and temperature rise curves can be used.
7. The temperature of the component (ambient plus temperature rise) must bewithin the stated operating range.
8. Optional tape and reel packaging can be ordered by adding a T suffix to the part-number (ie: PGL7252HL becomes PGL7252HLT). Pulse complies to the industrystan-dard tape and reel specification EIA481.

chanhvinh.com

Power Beads - PGL725XHLT Series
Coupled Inductor

Pulse a YAGEO company

PGL7252HLT

MECHANICALS

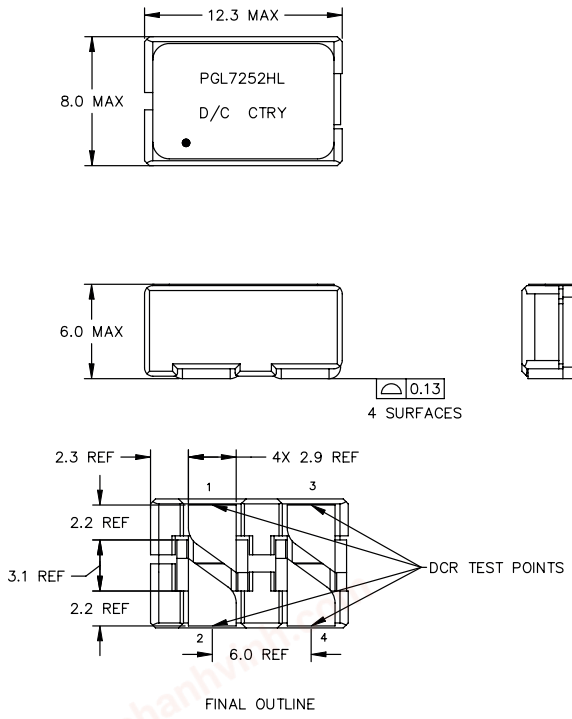

SCHEMATIC

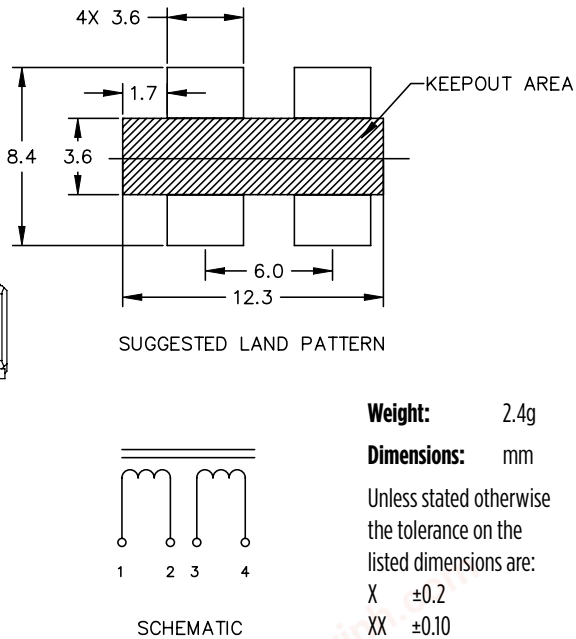

Weight: 2.4g

Dimensions: mm

Unless stated otherwise the tolerance on the listed dimensions are:
X ±0.2
XX ±0.10

PGL7253HLT

MECHANICALS

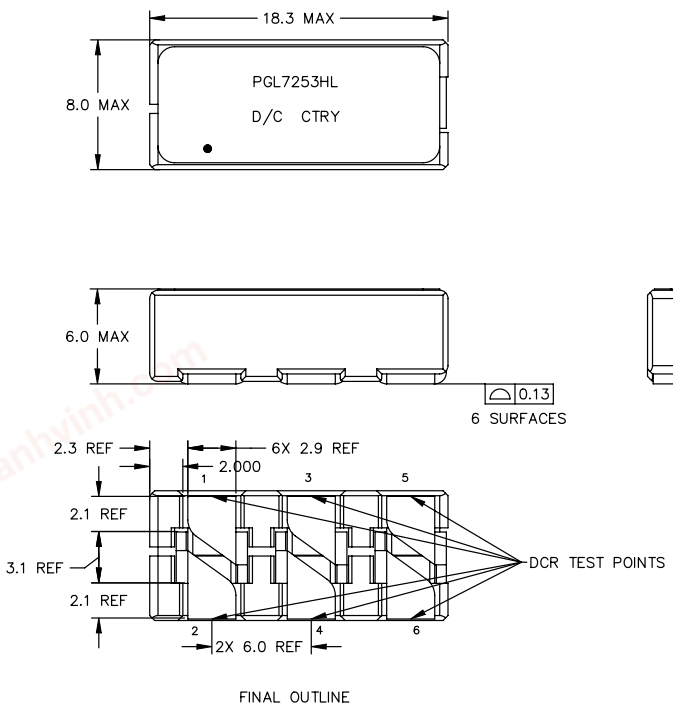

SCHEMATIC

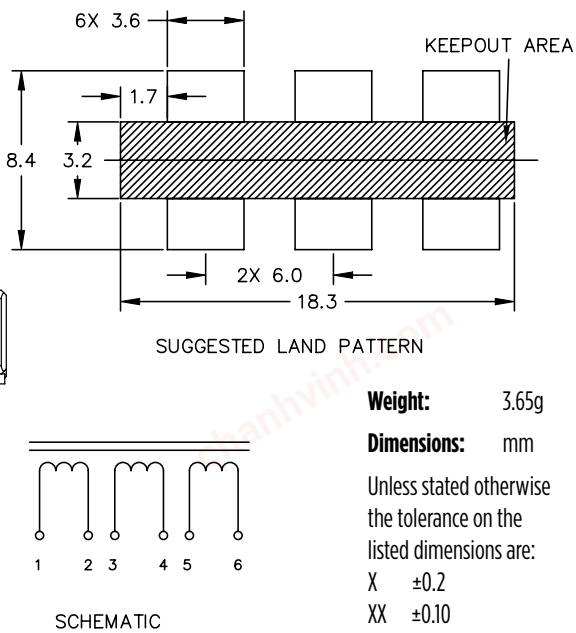

Weight: 3.65g

Dimensions: mm

Unless stated otherwise the tolerance on the listed dimensions are:
X ±0.2
XX ±0.10

chanhvinh.com

Power Beads - PGL725XHLT Series
Coupled Inductor

Pulse a YAGEO company

MECHANICALS

SCHEMATIC

PGL7254HLT

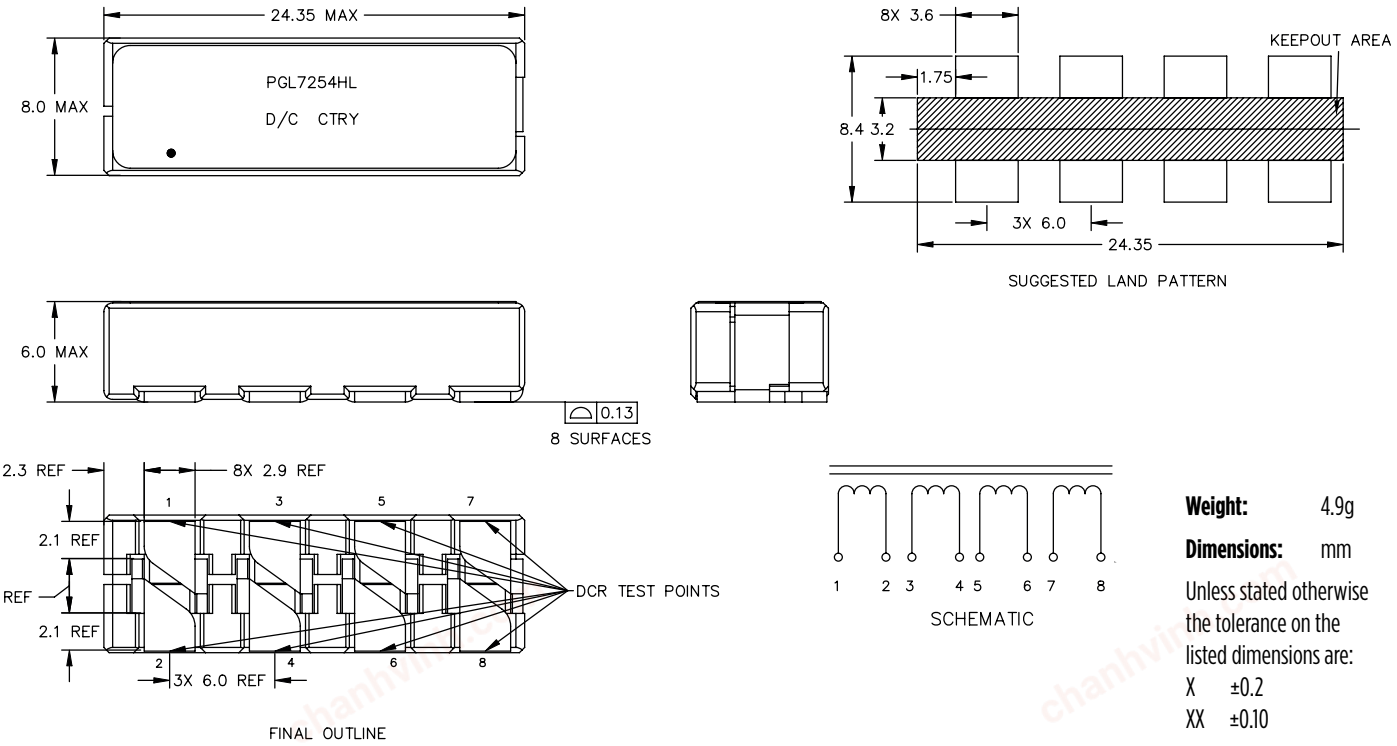

Weight: 4.9g

Dimensions: mm

Unless stated otherwise the tolerance on the listed dimensions are:

X ±0.2

XX ±0.10

OCL vs I curve

PGL7252HLT

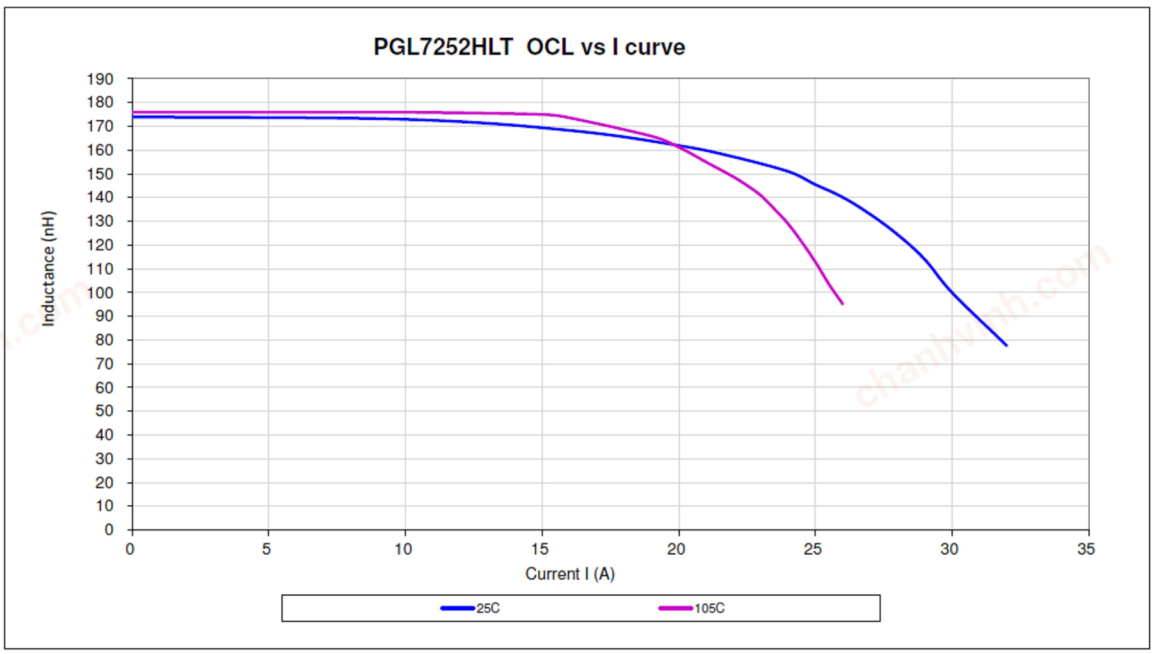

chanhvinh.com

OCL vs I curve

PGL7253HLT

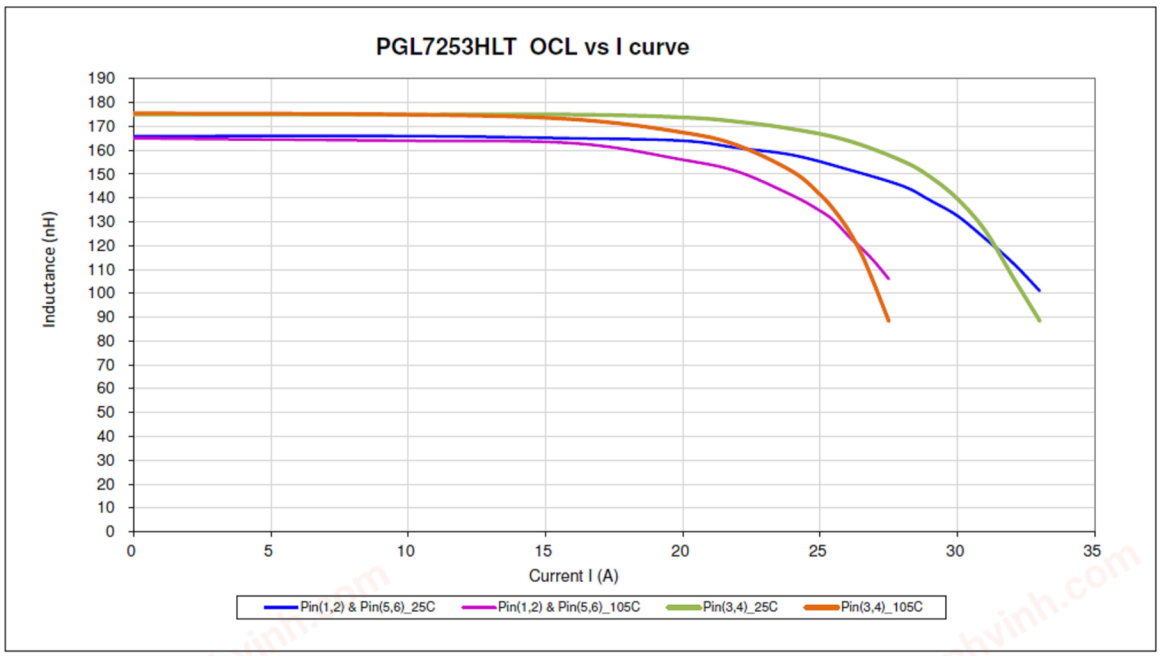

OCL vs I curve

PGL7254HLT

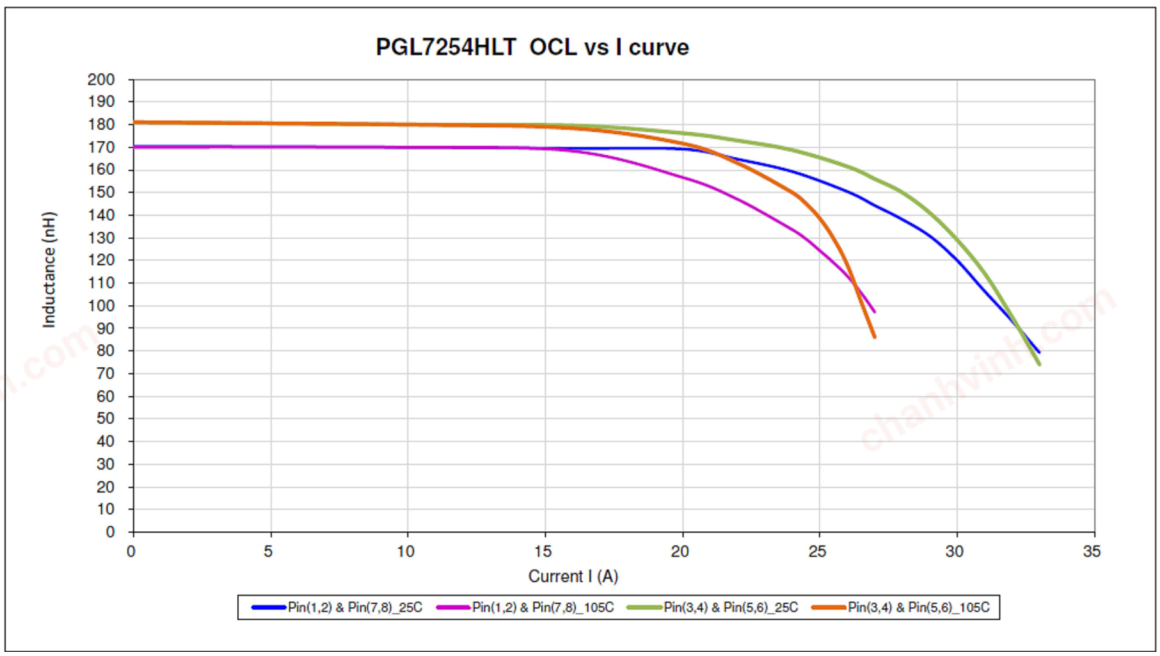

chanhvinh.com

SCL vs I curve

PGL7252HLT

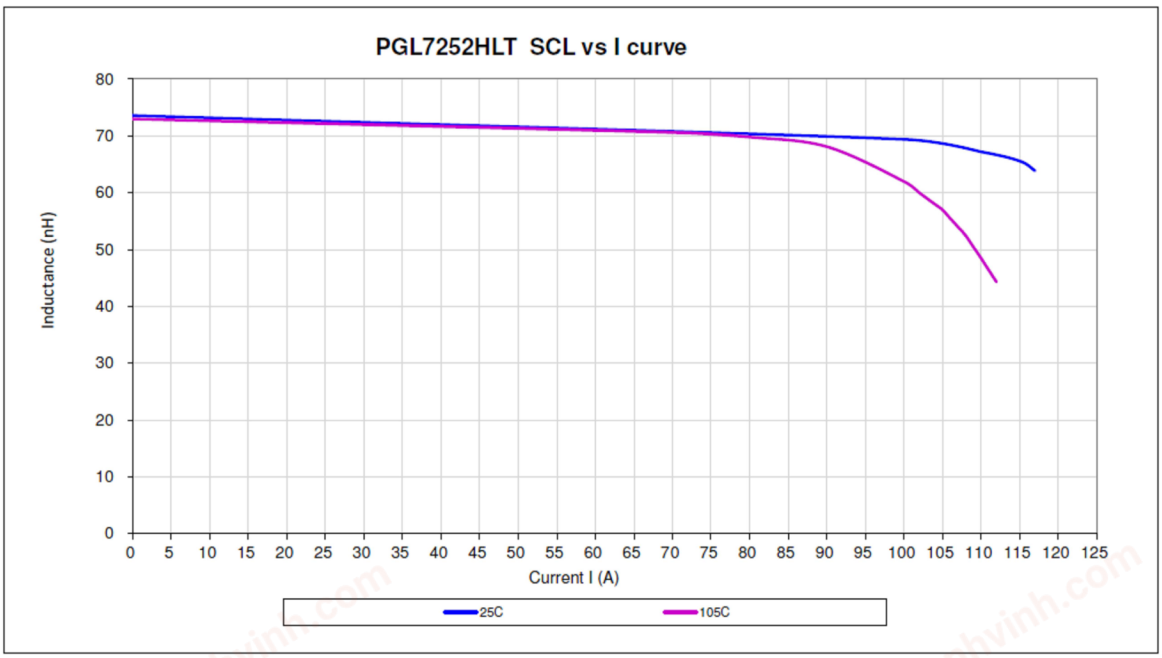

SCL vs I curve

PGL7253HLT

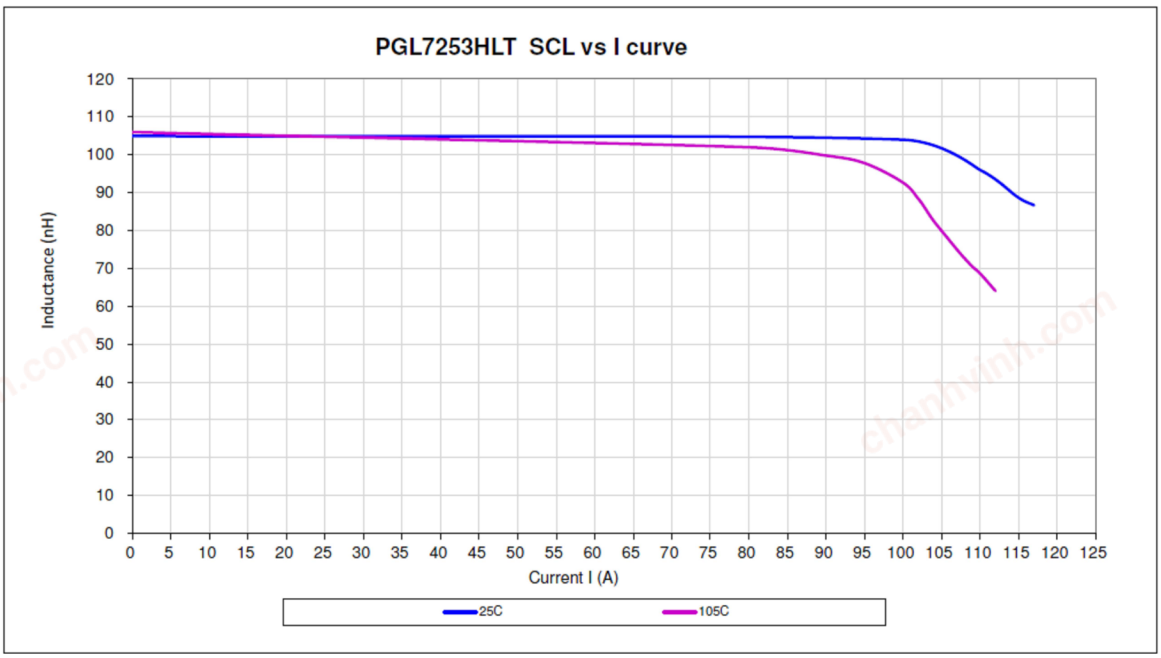

chanhvinh.com

SCL vs I curve

PGL7254HLT

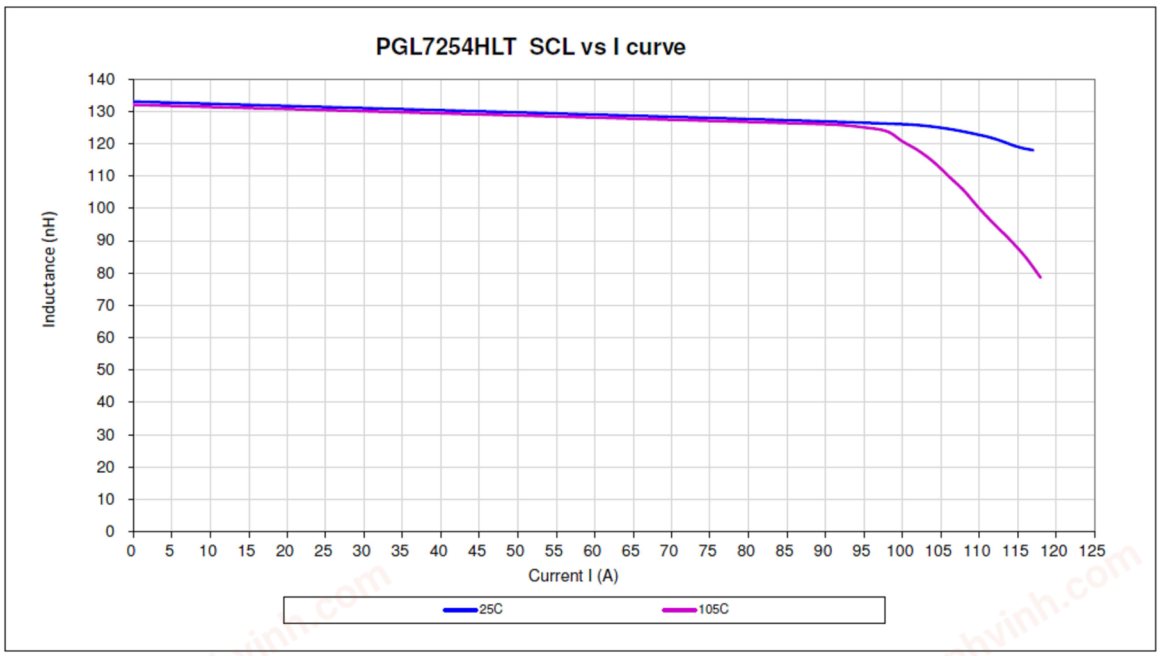

chanhvinh.com

TAPE AND REEL PACKING DETAILS

PGL725XHLT

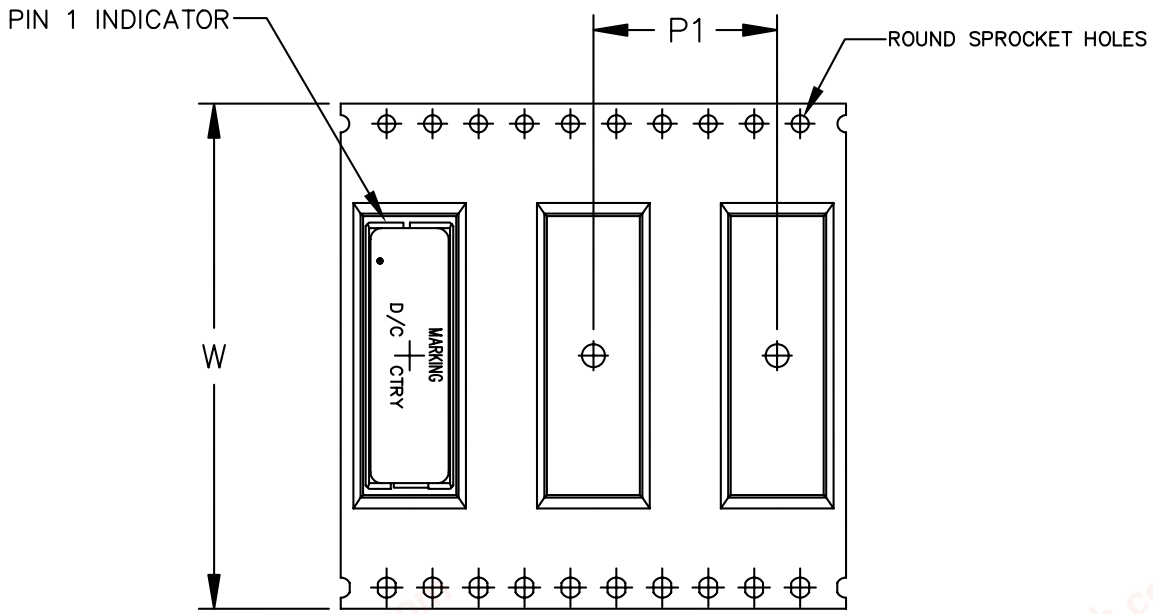

SURFACE MOUNTING TYPE, REEL/TAPE LIST					
PART NUMBER	REEL SIZE (mm)	TAPE SIZE (mm)			QTY
	A	P_1	W	K_0	PCS/REEL
PGL7252HLT	Ø330	16	24	6.2	600
PGL7253HLT	Ø330	16	32	6.2	600
PGL7254HLT	Ø330	16	44	6.2	600

For More Information:
Americas - prodinfo_power_americas@yageo.com | **Europe -** prodinfo_power_emea@yageo.com | **Asia -** prodinfo_power_asia@yageo.com

Performance warranty of products offered on this data sheet is limited to the parameters specified. Data is subject to change without notice. Other brand and product names mentioned herein may be trademarks or registered trademarks of their respective owners. © Copyright, 2023. Pulse Electronics, Inc. All rights reserved.

YAGEO Corporation and its affiliates do not recommend the use of commercial or automotive grade products for high reliability applications or manned space flight.