chanhvinh.com

SMT Common Mode Chokes

PGC6895NLT

Pulse
a YAGEO company

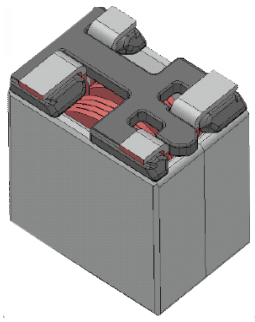

- *ER19 shaped core*
- *19.8x13.6x20.5mm max*
- *Up to 25Arms rated current*
- *Designed for DC/DC converters*
- *500Vrms Electrical Isolation (80Vrms continuous)*

Electrical Specifications @ 25°C – Operating Temperature -40°C to +125°C

Part Number	Inductance (1-2)	Irated	DCR (Typ)	DCR (max) (1-2)/ (3-4)	Hipot (1,2 – 3,4)	Impedance at SRF
	(uH ±45%)	A	(mΩ)	(mΩ)	(Vdc)	(kΩ TYP)
PGC6895NLT	225	25	1.9	2.5	600	1.4

NOTE:

1. Solderability: conforms to ANSI/J-STD-002, IPC/EIA J-STD-003A.
2. The temperature of the component (ambient plus temperature rise) must be within the stated operating temperature range.
3. Storage temperature: -40°C to +85°C.
4. Pulse complies to industry standard tape and reel specification EIA481.

Mechanical

Schematic

PGC6895NLT

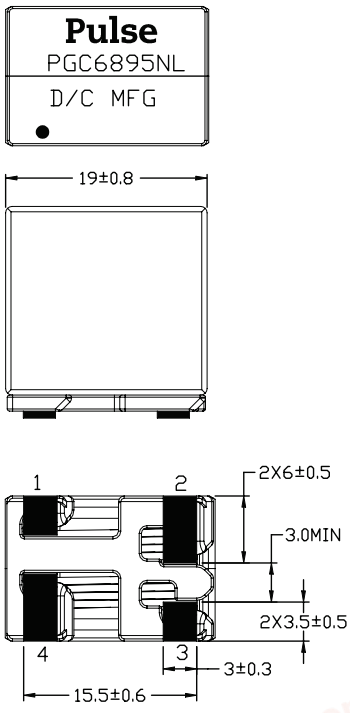

FINAL OUTLINE

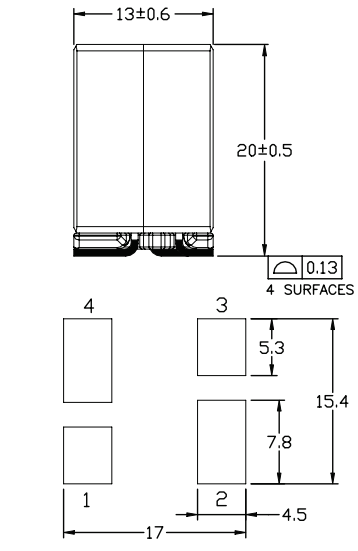

SUGGESTED LAND PATTERN

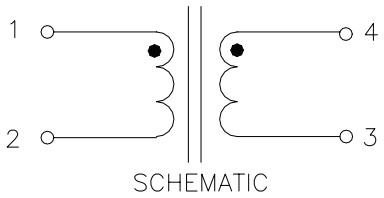

SCHEMATIC

Weight 20.7grams

Tape & Reel 60/reel

Dimensions: mm

Unless otherwise specified, all tolerances are
.x = ±0.25
.xx = ±0.13

chanhvinh.com

SMT Common Mode Chokes

PGC6895NLT

Impedance vs Frequency

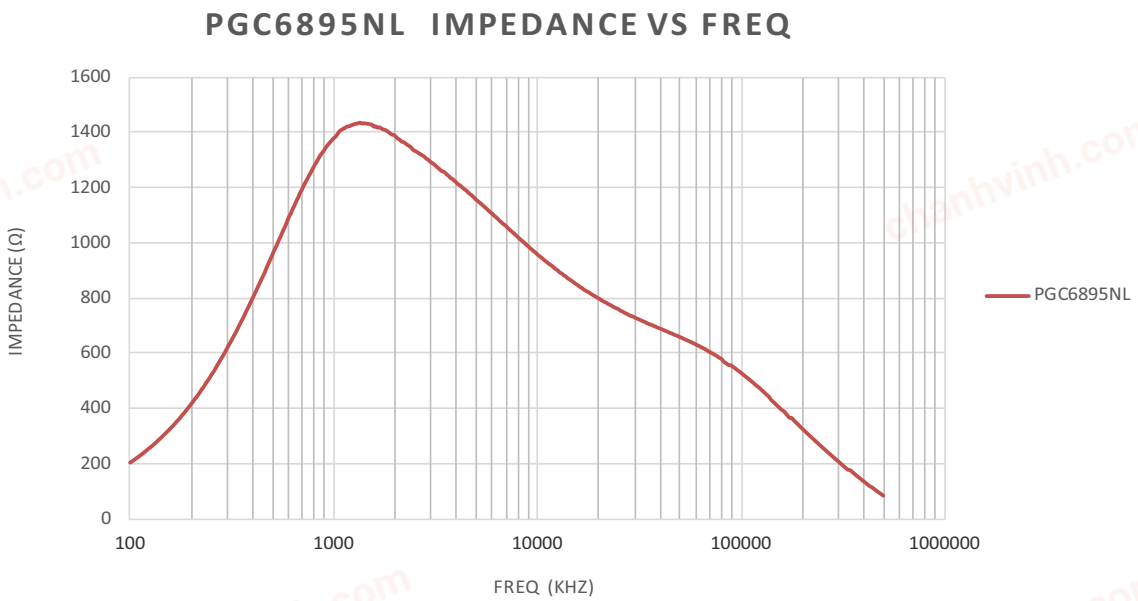

TAPE & REEL INFO

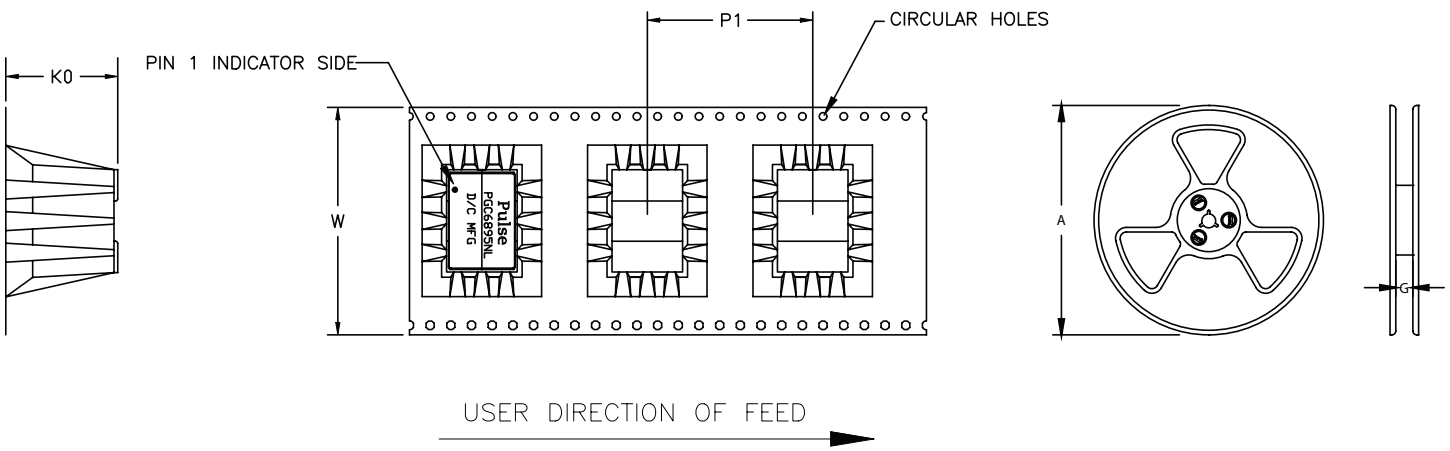

SURFACE MOUNTING TYPE, REEL/TAPE LIST					
PART NUMBER	REEL SIZE (mm)	TAPE SIZE (mm)			QTY
	A	P_1	W	K_0	PCS/REEL
PGC6895NLT	330	32	44	21.3	60

For More Information:

Americas - prodinfo_power_americas@ yageo.com | **Europe -** prodinfo_power_emea@yageo.com | **Asia -** prodinfo_power_asia@yageo.com

Performance warranty of products offered on this data sheet is limited to the parameters specified. Data is subject to change without notice. Other brand and product names mentioned herein may be trademarks or registered trademarks of their respective owners. © Copyright, 2023. Pulse Electronics, Inc. All rights reserved.