chanhvinh.com

THT Power Inductors

Toroid - Vertical, Low Profile and Klipmount™

Pulse Electronics

RoHS COMPLIANT



- *Available in vertical, low profile and Klipmount™*
- *SMPS averaging filter*
- *Characterized for general purpose use and ripple filters*
- *Single-layer designs*
- *Can be used as differential mode inductors in EMI filters[3]*

Electrical Specifications @ 25°C – Operating Temperature -40°C to 130°C

Reference Operating Values						Design Control Values					
Vertical[6] Part Number	Low Profile Part Number	Inductance[1] Typical (µH)	IDC (AMPS)	ET_{OP} (V-µSec)	Energy[4] Storage (µJ)	Inductance No DC (µH) (±20%)	20 kHz Test mV No DC	DCR[5] (Ω MAX)	Coil Size Code	Klip* Mount Package	Lead Diameter (in ± .003)
PE-51591NL	—	20	2.0	52	40	32.8	33	.060	H	—	.020
PE-92100NL	—	25	2.6	30	85	20.7	22	.043	A	KM1	.020
PE-92101NL	PE-92401NL	50	2.6	50	169	45.7	45	.071	B	KM2	.020
PE-92102NL	PE-92402NL	100	2.6	90	338	94.1	90	.100	C	KM3	.020
PE-92103NL	—	35	2.6	55	118	28.4	36	.037	B	KM2	.025
PE-92104NL	PE-92404NL	70	3.0	85	315	61.0	73	.052	C	KM3	.025
PE-92105NL	PE-92405NL	145	3.0	140	653	141.8	140	.087	D	KM4	.025
PE-92106NL	—	285	3.0	300	1283	264.1	340	.140	E	KM5	.025
PE-92107NL	—	450	3.0	425	2025	436.3	500	.200	F	—	.025
PE-92108NL	PE-92408NL	67	3.6	130	648	90.7	110	.045	D	KM4	.032
PE-92109NL	—	165	4.0	240	1320	152.0	260	.070	E	KM5	.032
PE-92110NL	—	270	4.0	350	2160	263.9	400	.100	F	—	.032
PE-92111NL	—	40	4.0	70	320	37.9	57	.027	C	KM3	.032
PE-51590NL	—	22	5.0	44	275	20.3	37	.020	G	—	.032
PE-92112NL	PE-92412NL	100	5.0	200	1250	90.7	180	.034	E	KM5	.042
PE-92113NL	—	170	5.0	300	2125	159.7	310	.050	F	—	.042
PE-92114NL	PE-92414NL	35.6	5.0	100	688	55.6	88	.023	D	KM4	.042
PE-92115NL	—	95	7.0	225	2328	96.0	200	.025	F	—	.051
PE-92116NL	PE-92416NL	55	7.0	150	1348	49.1	100	.017	E	KM5	.051
PE-92117NL	—	55	10.0	175	2750	55.9	120	.013	F	—	.064

* Parts available with KlipMount option can be ordered by adding a "K" suffix to the part number (i.e. PE-92100K).

chanhvinh.com

THT Power Inductors

Toroid - Vertical, Low Profile and Klipmount™

Relationships Between Reference and Operating Conditions

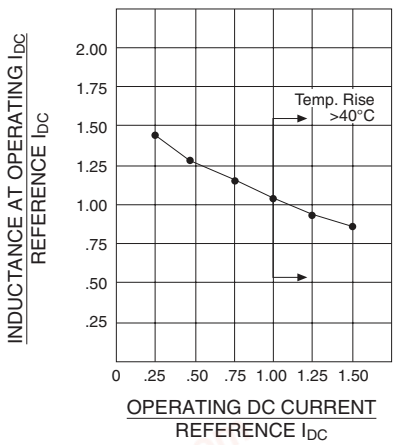

Inductance vs. Operating ET
(at reference I_{DC})

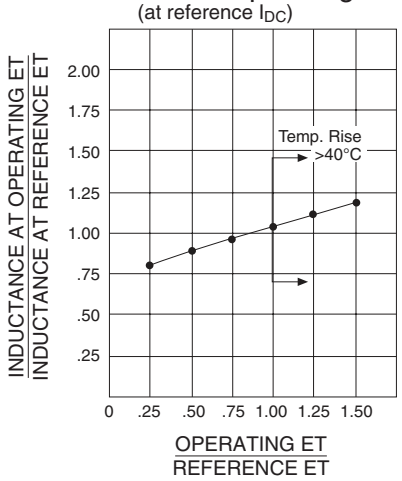

Max. Operating ET vs. Frequency
(at reference I_{DC})

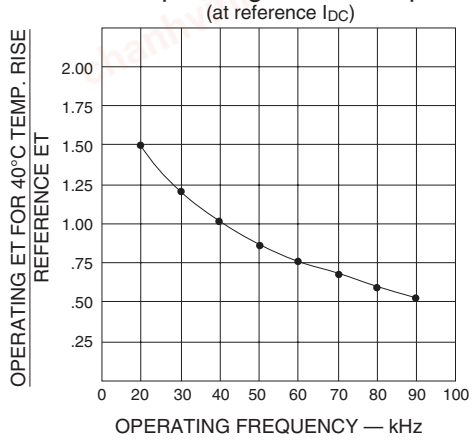

Mechanical **Schematic**

Klipmount™ Package

- Base material meets flammability requirements of UL 94V-0
- Mechanically rigid mount
- PC Board - automatic insertability
- Lowest cost

Standard Package	A	B	C	D	E
	Maximum			Typical	
KM-1	.340 8,64	.580 14,73	.650 16,51	.29 7,37	.110 2,79
KM-2	.450 11,43	.650 16,51	.700 17,78	.325 8,26	.150 3,81
KM-3	.450 11,43	.850 21,59	.950 24,13	.415 10,54	.150 3,81
KM-4	.620 15,50	.970 24,64	1.10 27,94	.475 12,07	.225 5,72
KM-5	.700 17,78	1.30 33,02	1.40 35,56	.625 15,88	.250 6,35

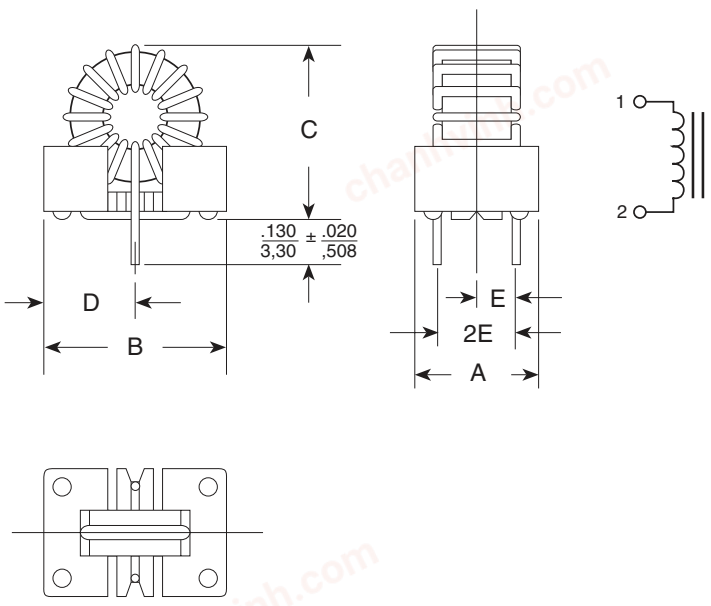

Note: Units with large wire sizes may exceed B dimension.
KLIPMOUNT™ is a trademark of Pulse Engineering, Inc.

Dimensions: Inches / mm Unless otherwise specified, all tolerances are ± .010 / 0,25

chanhvinh.com

THT Power Inductors

Toroid - Vertical, Low Profile and Klipmount™

Mechanicals *(continued)*

Vertical and Low Profile Package

Size Code	P (MAX)	N (MAX)	L (+.125/-.025)	M	K
A	.550 / 13,97	.250 / 6,35	.375 / 9,53	.180 / 4,57	——
B	.700 / 17,78	.380 / 9,65	.375 / 9,53	.280 / 7,11	.530 / 13,46 ± .050 / 1,27
C	.850 / 21,59	.410 / 10,41	.375 / 9,53	.280 / 7,11	.720 / 18,29 ± .050 / 1,27
D	1.050 / 26,67	.550 / 13,97	.375 / 9,53	.400 / 10,16	.840 / 21,24 ± .020 / 0,51
E	1.400 / 35,56	.700 / 17,78	.375 / 9,53	.500 / 12,7	1.100 / 27,94 ± .100 / 2,54
F	1.650 / 41,91	.700 / 17,78	.375 / 9,53	.500 / 12,7	——
G	.850 / 21,59	.330 / 8,38	.330 / 8,38	.330 / 8,38	——
H	.650 / 16,26	.280 / 7,11	.280 / 7,11	.280 / 7,11	——

Vertical Package

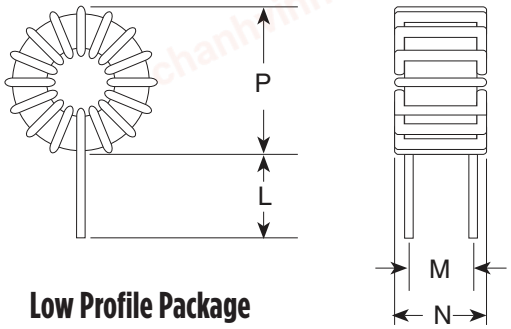

Low Profile Package

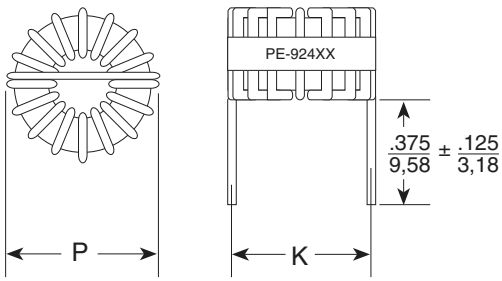

Notes:

1. Typical Inductance occures at I_{DC} and ET_{OP} values shown.
2. Design control test voltage is critical. Inductance increases with voltage.
3. For line filter applications, RMS line current is limited to specified reference DC current.
4. $\frac{LI^2}{2}$ rating is the ability of the inductor to store energy.
5. DCR for vertical part measured close to coil. Add 10% more for low profile part.

For More Information

Pulse Worldwide Headquarters
12220 World Trade Drive
San Diego, CA
92128
U.S.A.

Tel: 858 674 8100
Fax: 858 674 8262

Pulse Europe
Einsteinstrasse 1
D-71083 Herrenberg
Germany

Tel: 49 7032 78060
Fax: 49 7032 7806 135

Pulse China Headquarters
B402, Shenzhen Academy of Aerospace Technology Bldg.
10th Kejinan Road
High-Tech Zone
Nanshan District
Shenzen, PR China
518057
Tel: 86 755 33966678
Fax: 86 755 33966700

Pulse North China
Room 2704/2705
Super Ocean Finance Ctr.
2067 Yan An Road West
Shanghai 200336
China

Tel: 86 21 62787060
Fax: 86 2162786973

Pulse South Asia
135 Joo Seng Road
#03-02
PM Industrial Bldg.
Singapore 368363

Tel: 65 6287 8998
Fax: 65 6287 8998

Pulse North Asia
3F, No. 198
Zhongyuan Road
Zhongli City
Taoyuan County 320
Taiwan R. O. C.
Tel: 886 3 4356768
Fax: 886 3 4356823 (Pulse)
Fax: 886 3 4356820 (FRE)

Performance warranty of products offered on this data sheet is limited to the parameters specified. Data is subject to change without notice. Other brand and product names mentioned herein may be trademarks or registered trademarks of their respective owners. © Copyright, 2015. Pulse Electronics, Inc. All rights reserved.