chanhvinh.com

Directional DAS Series
4-port 2xMiMo 4G/5G Antenna

PD617-6000M4NF



Features & Applications:

- *4G / 5G-FR1 617-6000MHz*
- *2-Port MiMo Low/mid -bands 617-960 / 1695-2700MHz*
- *2-Port MiMo High -bands 3300-4000 / 4800-6000MHz*
- *In-building wall mount*
- *Directional radiation pattern*
- *Low PIM and SAR compliant*
- *Connector N-Female as standard*
- *For 4.3-10 Female version use P/N: PD617-6000M443*

ELECTRICAL SPECIFICATIONS

PD617-6000M4NF

				LB 2-ports		HB 2-ports	
Frequency range		MHz		617-960	1695-2700	3300-4000	4800-6000
Gain		dBi		6.5±1	7.0±1	10.5±1	10.5±1
Polarization			+/-45deg slant				
Beam width	Horizontal	deg		80	75	60	60
	Vertical			70	60	35	35
VSWR				≤1.7	≤1.5	≤1.7	≤1.7
Front-to-back ratio		dB		15	20	25	20
Isolation		dB		>20	>23	>23	>23
PIM,3rd order,2x20W		dBc		≤-153			N/A
Max. input power		W	100				
Impedance		Ohm	50				
SAR compliance			Compliant based on whole-body SAR limit RF Exposure calculation (CEI EN 50383)				

MECHANICAL SPECIFICATIONS

PD617-6000M4NF

Dimension (W x L x H)	Housing Material	Color	Weight with mounting kit	Mounting Kit	
308 x 420 x 82 mm (12.13 x 16.54 x 3.23 inch)	ABS, UV Protected	White RAL9003	1.6 kg (3.527 lbs)	Wall mount (standard)	

Wireless Technology	No. of Port	Cable Length	Cable Type	Connector Type
4G,5G FR1	4	1Ft (0.3m)	Ø 0.160" low loss	NF

ENVIRONMENTAL SPECIFICATIONS

PD617-6000M4NF

Operating Temperature	Storage Temperature	RoHS Compliant	Ingress Protection	Warranty
-55 / +60° C	-55 / +60° C	Yes	IP50	2 years

chanhvinh.com

Radiation Pattern –Vertical and Horizontal Plane

PD617-6000M4NF

Vertical

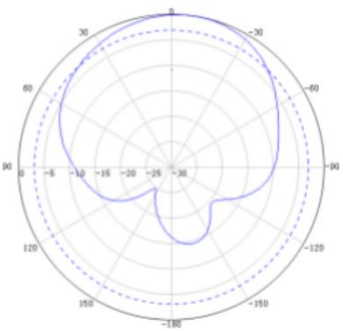

800MHz

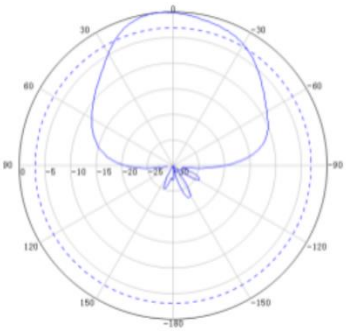

1800MHz

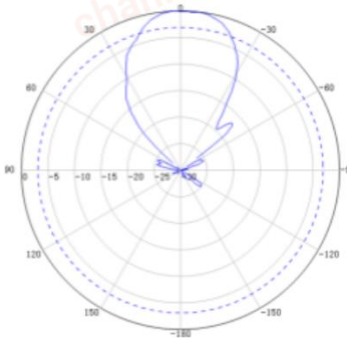

3500MHz

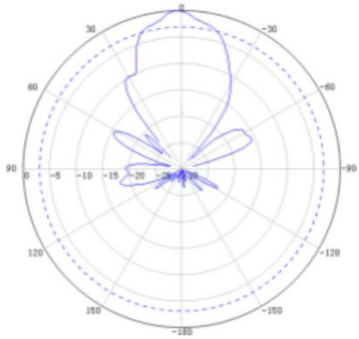

5300MHz

Horizontal

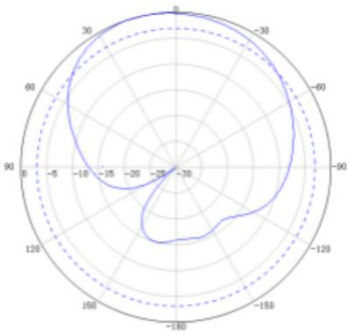

800MHz

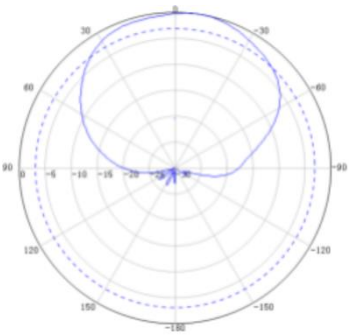

1800MHz

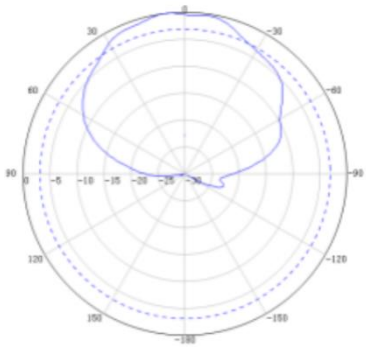

3500MHz

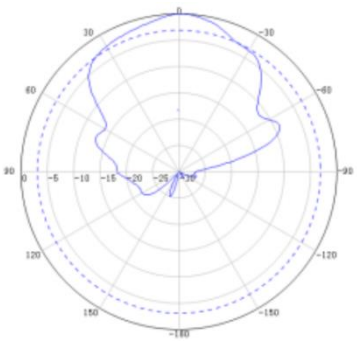

5300MHz

chanhvinh.com

Mechanical Drawing

PD617-6000M4NF

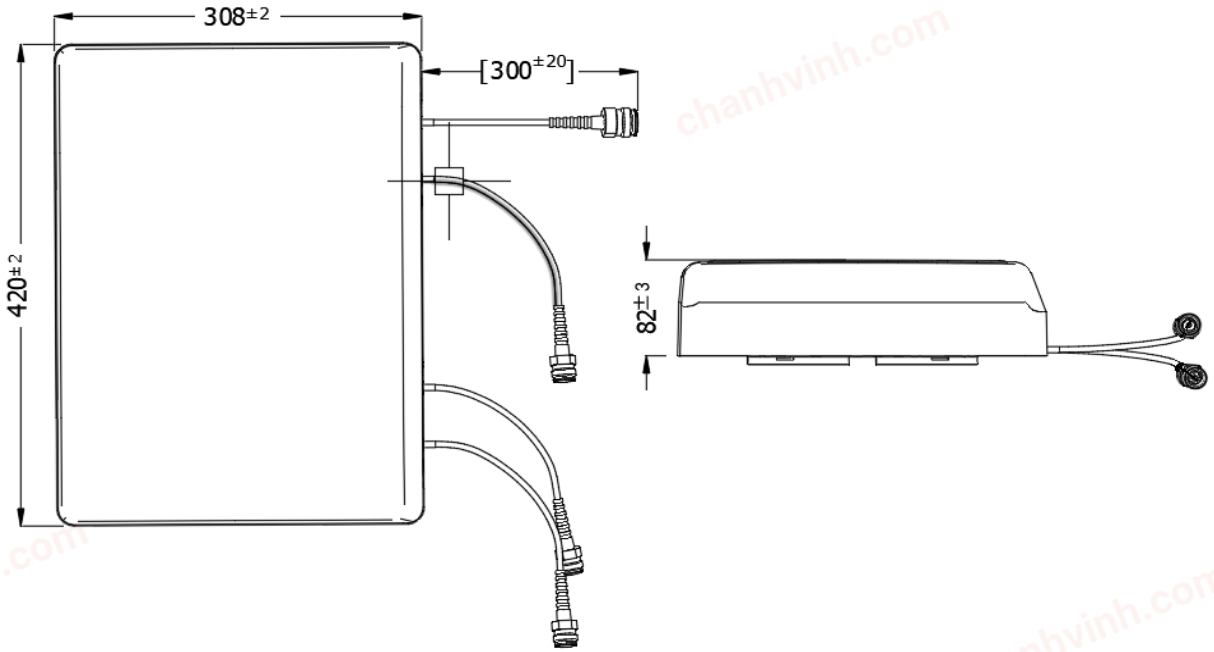

Test Setup

General / Chamber Setup

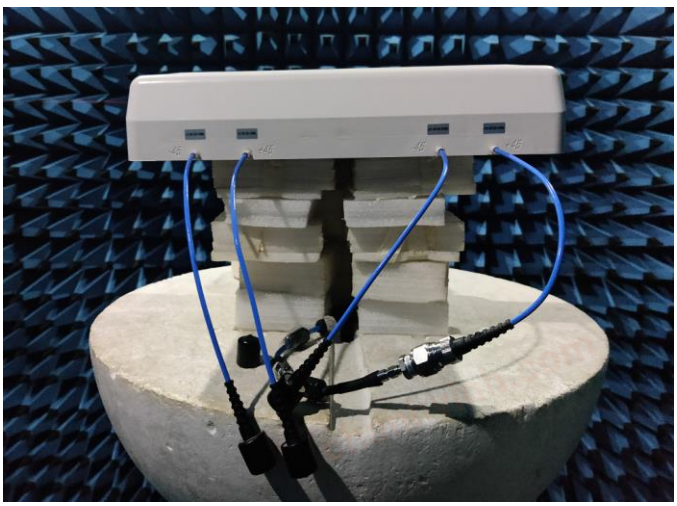

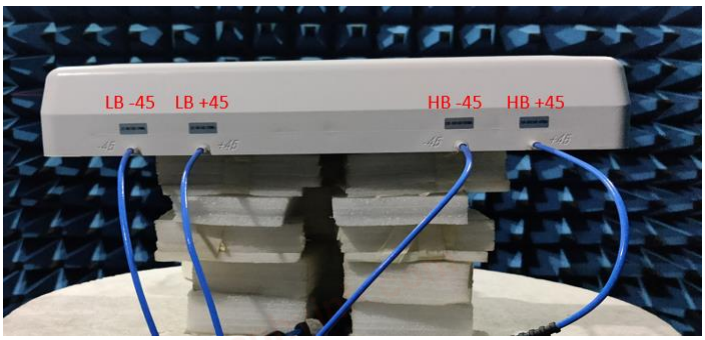

chanhvinh.com

Directional DAS Series
4-port 2xMiMo 4G/5G Antenna

PD617-6000M4NF

PACKAGING

PD617-6000M4NF

1.Inner box: 475*415*155mm;

2.Outer box size: 815*485*450mm;

3. 5Pcs/Carton;

Installation instructions

PD617-6000M4NF

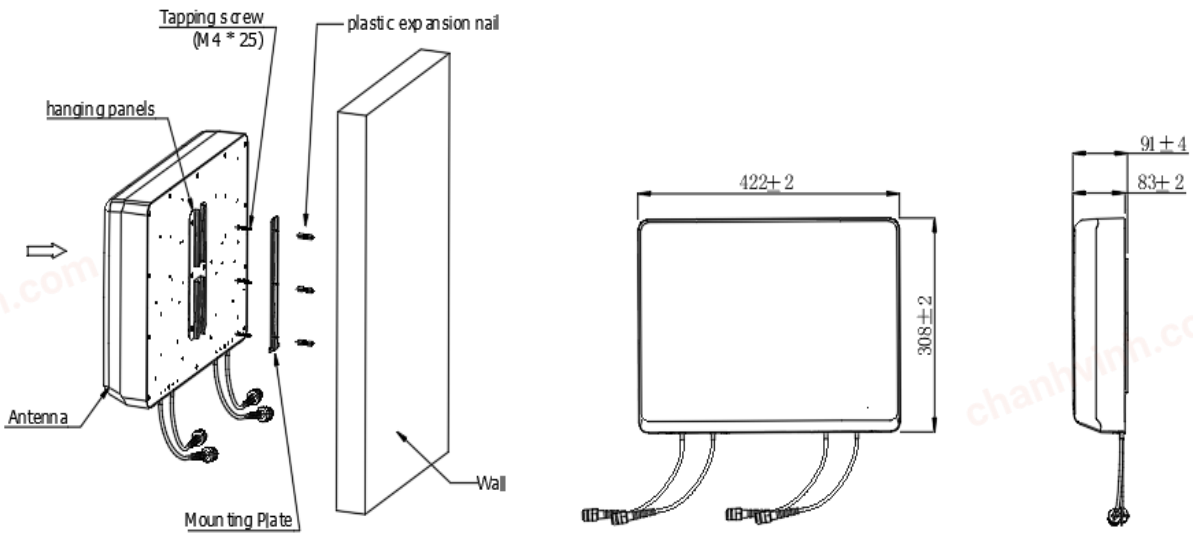

① Make four (M6*25) holes in the wall.

② Put the plastic expansion nail into the hole.

③ Attach the mounting plate to the wall with self-tapping screws (M4 * 25) and tighten.

④ Buckle the antenna back plate onto the wall mounting plate.

Notes:

1. Please contact sales for availability, lead time, and/or any special requests. Samples available upon request.

For More Information:
Americas - antennas.us@pulseelectronics.com | Europe – antennas.eu@pulseelectronics.com | Asia – antennas.as@pulseelectronics.com | Questions? +1-800-ANTENNA
Performance warranty of products offered on this data sheet is limited to the parameters specified. Data is subject to change without notice. Other brand and product names mentioned herein may be trademarks or registered trademarks of their respective owners. © Copyright , 2020. Pulse Electronics, Inc. All rights reserved.
Company address: Pulse Electronics, a YAGEO Company, 15255 Innovation Drive, Suite #100, San Diego, CA 92128