chanhvinh.com

Directional DAS Series
2xMiMo 4G/5G Antenna

PD617-6000M2NF

Pulse
a YAGEO company



Features & Applications:

- *4G / 5G-FR1 617-6000MHz*
- *2-Port MiMo*
- *In-building wall mount*
- *Directional radiation pattern*
- *Low PIM and SAR compliant*
- *Connector N-Female as standard*
- *For 4.3-10 Female version use P/N: PD617-6000M243*

ELECTRICAL SPECIFICATIONS

PD617-6000M2NF

Frequency range		MHz	617-698	698-960	1710-2700	3300-4000	4900-6000
Gain		dBi	5.5±1	6.0±1	7.0±1	6.0±1	6.5±1
Polarization			±45deg cross				
Beam width	Horizontal	deg	80	70	68	55	50
	Vertical		70	70	68	50	50
VSWR			≤1.8	≤1.8	≤1.8	≤1.8	≤1.8
Front-to-back ratio		dB	10	10	10	10	10
PIM,3rd order,2x20W		dBc	-	≤-153			N/A
Max. input power		W	50				
Impedance		Ohm	50				
SAR compliance			Compliant based on whole-body SAR limit RF Exposure calculation (CEI EN 50383)				

MECHANICAL SPECIFICATIONS

PD617-6000M2NF

Dimension (W x L x H)	Housing Material	Color	Weight with mounting kit	Mounting Kit	
422 x 308 x 100 mm (16.61 x 12.13 x 3.94 inch)	ABS, UV Protected	White RAL9003	2.0kg (4.41lbs)	Wall mount (standard)	

Wireless Technology	No. of Port	Cable Length	Cable Type	Connector Type
4G,5G FR1	2	1Ft (0.3m)	Ø 0.160" low loss	NF

ENVIRONMENTAL SPECIFICATIONS

PD617-6000M2NF

Operating Temperature	Storage Temperature	RoHS Compliant	Ingress Protection	Warranty
-55 / +60° C	-55 / +60° C	Yes	IP50	2 years

chanhvinh.com

Radiation Pattern –Vertical and Horizontal Plane

PD617-6000M2NF

Vertical

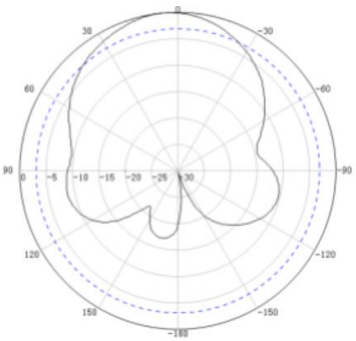

806MHz

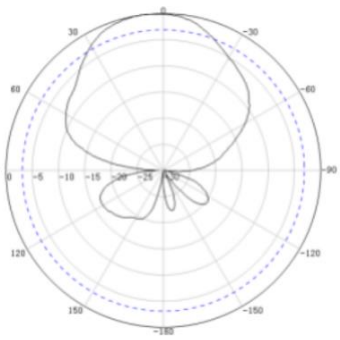

1920MHz

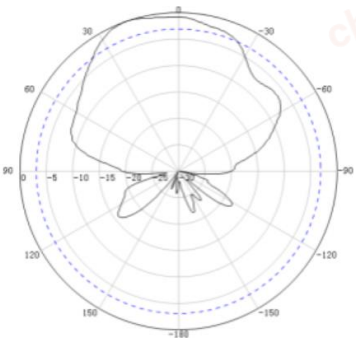

3500MHz



5450MHz

Horizontal

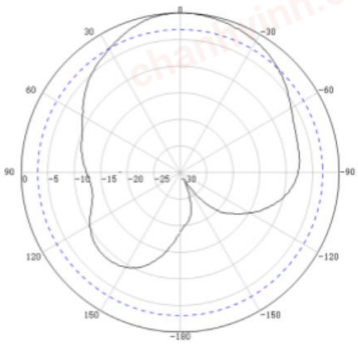

806MHz

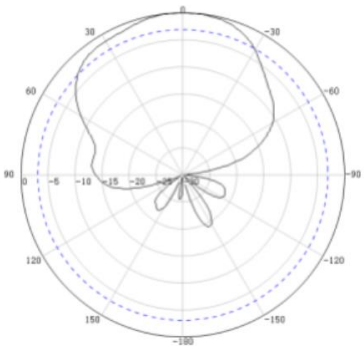

1920MHz

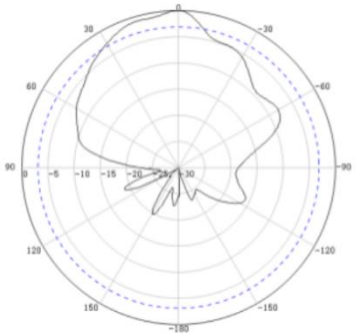

3500MHz

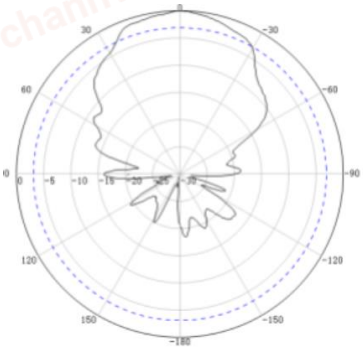

5450MHz

chanhvinh.com

Mechanical Drawing

PD617-6000M2NF

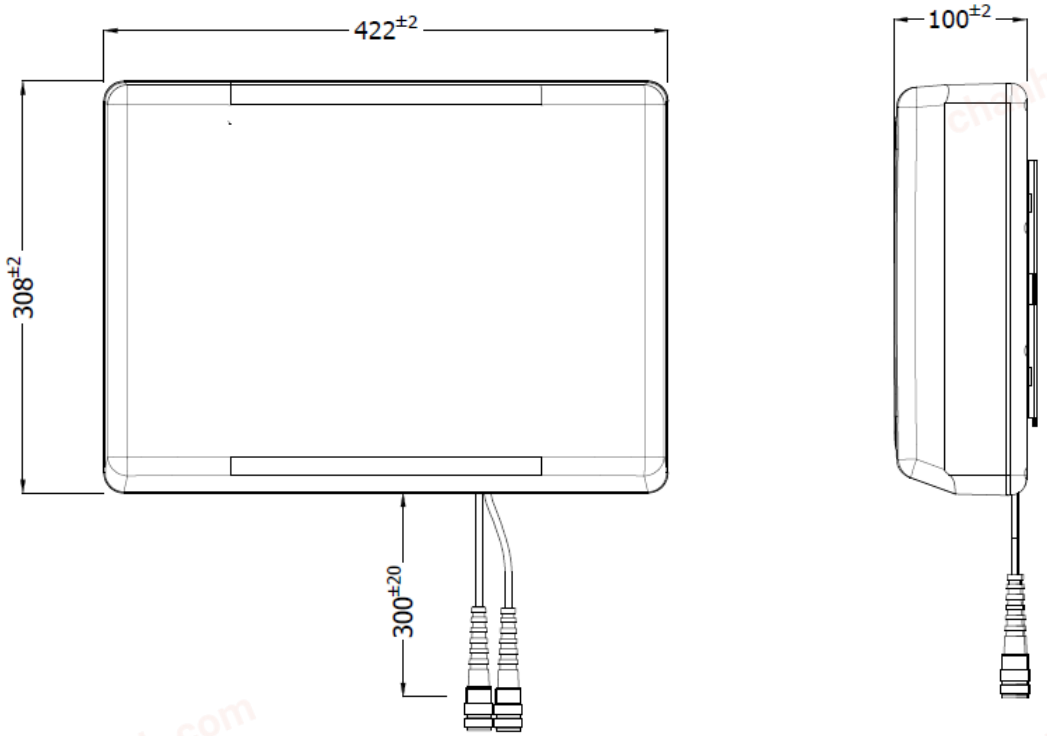

Test Setup

General / Chamber Setup

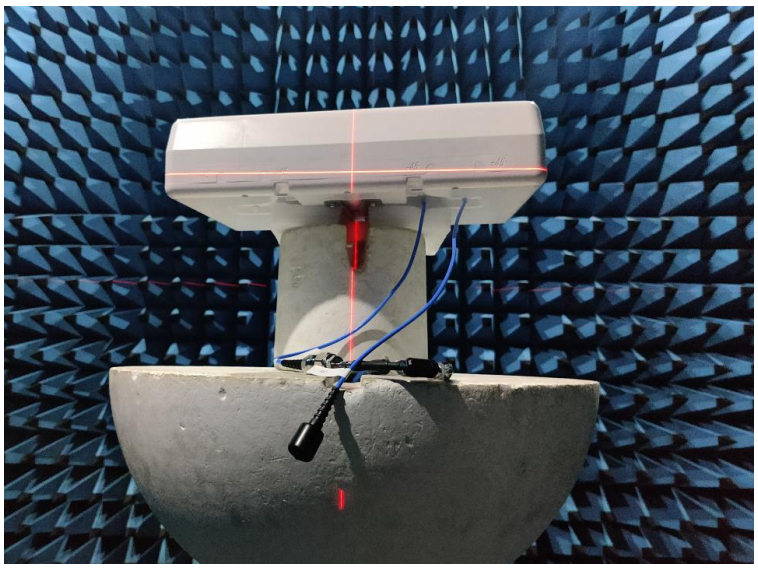

chanhvinh.com

PACKAGING

PD617-6000M2NF

1.Inner box: 475*415*155mm;

2.Outer box size: 815*485*450mm;

3. 5Pcs/Carton;

Installation instructions

PD617-6000M2NF

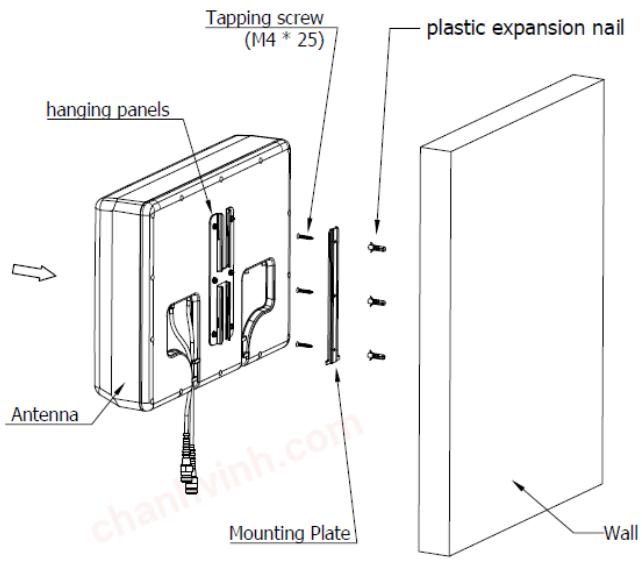

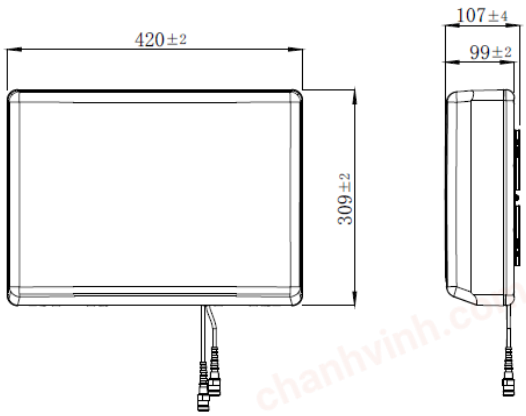

① Make four (M6*25) holes in the wall.

② Put the plastic expansion nail into the hole.

③ Attach the mounting plate to the wall with self-tapping screws (M4 * 25) and tighten.

④ Buckle the antenna back plate onto the wall mounting plate.

Notes:

1. Please contact sales for availability, lead time, and/or any special requests. Samples available upon request.

For More Information:
Americas - antennas.us@pulseelectronics.com | Europe – antennas.eu@pulseelectronics.com | Asia – antennas.as@pulseelectronics.com | Questions? +1-800-ANTENNA
Performance warranty of products offered on this data sheet is limited to the parameters specified. Data is subject to change without notice. Other brand and product names mentioned herein may be trademarks or registered trademarks of their respective owners. © Copyright , 2020. Pulse Electronics, Inc. All rights reserved.
Company address: Pulse Electronics, a YAGEO Company, 15255 Innovation Drive, Suite #100, San Diego, CA 92128