chanhvinh.com

SMT Power Inductors

Power Beads - PAL6373.XXXHLT Series

Pulse a YAGEO company



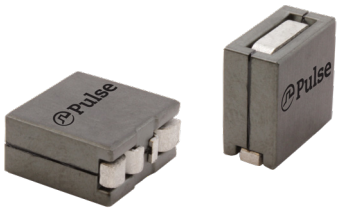

- ***Current Rating:*** *Over 100A peak*
- ***Inductance Range:*** *100nh to 180nH*
- ***Height:*** *12.0mm Max*
- ***Footprint:*** *12.0mm x 6.0mm Max*

Electrical Specifications @ 25°C — Operating Temperature - 40°C to +125°C

Part Number	Inductance[1] @ 0ADC (nH +/- 15%)	Inductance[2] @ I sat (nH MIN)	Irated[3] (A)	DCR (1-4) MAX	DCR (2-3) MAX	DCR (1-2) MIN	Saturation Current[5] (A TYP)		Heating Current (1-4) A TYP	Heating Current (2-3) A TYP	HiPot (1-2) (Vdc)
							25°C	100°C			
PAL6373.101HLT	100	70	75	0.14mOhm	0.52mOhm	1.0kOhm	117	100	75	40	100
PAL6373.121HLT	120	84	75				106	90			
PAL6373.151HLT	150	105	75				80	68			
PAL6373.181HLT	180	126	65				65	55			

NOTES:

1. Inductance measured at 100kHz, 1.0mVrms.
2. Inductance at Irated is the value of the inductance at 25°C at the listed rated current.
3. Rated Current is the DC current which causes the part temperature to increase by approximately 40C. It is a calculated value and will vary within application based on ambient temperature, air flow, surrounding component temperature and heat sinking. Part temperature should not exceed 125C under worst case operating conditions. Part temperature should be verified in the end application.
4. The nominal DCR is measured at point 2., as shown below on the mechanical drawing.
5. The saturation current is the typical current which causes the inductance to drop by 20% at the stated ambient temperatures (25°C, 100°C). This current is determined by placing the component in the specified ambient environment and applying a short duration pulse current (to eliminate self-heating effects) to the component.
6. In high volt*time applications, additional heating in the component can occur due to core losses in the inductor which may neccessitate derating the current in order to limit the temperature rise of the component. To determine the approximate total losses (or temperature rise) for a given application, the coreloss and temperature rise curves can be used.In high volt*time applications, additional heating in the component can occur due to core losses in the inductor which may neccessitate derating the current in order to limit the temperature rise of the component. To determine the approximate total losses (or temperature rise) for a given application, the coreloss and temperature rise curves can be used.
7. Parts with the HLT suffix are sold in tape and reel packaging. Pulse complies to industry standard tape and reel specification EIA-481.
   The tape and reel for this product has a width (W=24mm), pitch (Po=12mm) and depth (Ko=12.2mm). Samples of these parts can be ordered by removing the HLT suffix and replacing with HL.
8. The temperature of the component (ambient plus temperature rise) must be within the stated operating temperature range.
9. Sample Value only. Guaranteed by Design and not tested in production
10. HiPot: (1-4) to (2-3), 100Vdc, 1.0mA, 2sec
11. Leakage Inductance (LL): At 100KHz, 1.0 Vrms, Pins(1-4)=10nH max(with pin2/3 shorted)
12. Couple Coefficient (Kps): 0.95 Min

$$Kps := \sqrt{1 - \frac{LL}{\text{INDUCTANCE (1 - 4)}}}$$

chanhvinh.com

SMT Power Inductors

Power Beads - PAL6373.XXXHLT Series

Pulse a YAGEO company

Mechanical

Schematic

PAL6373.XXXHLT

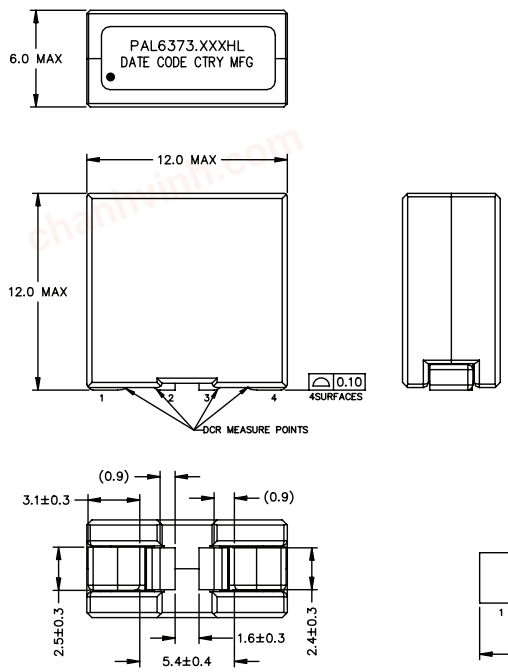

SUGGESTED LAND PATTERN

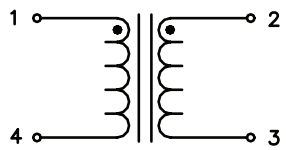

Weight: 2.74grms

Tape &Reel: 320/ Reel

Dimensions: mm

Unless otherwise specified , all tolerances are ± 0.25

TAPE & REEL INFO

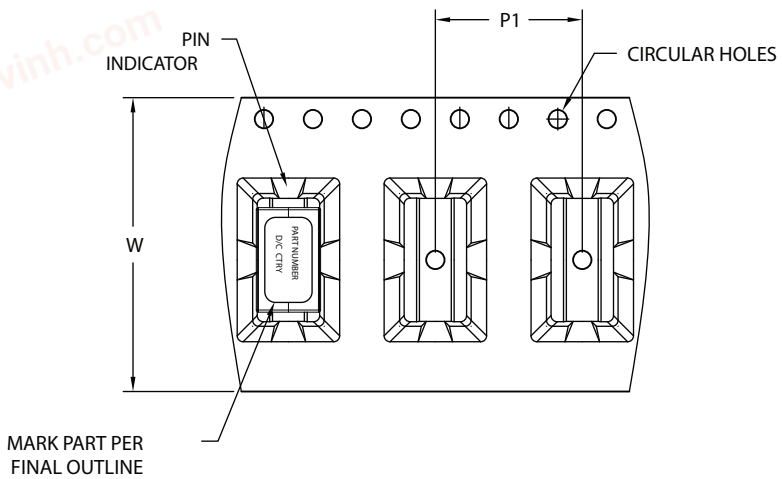

SURFACE MOUNTING TYPE, REEL/TAPE LIST				
TYPE	REEL SIZE (mm)			QTY
	W ± 0.30	P0 ± 0.1	K0	PCS/REEL
PAL6373.XXXHLT	24.0	12.0	12.2	320

chanhvinh.com

PAL6373.XXXHLT, L vs I, Curve 25°C

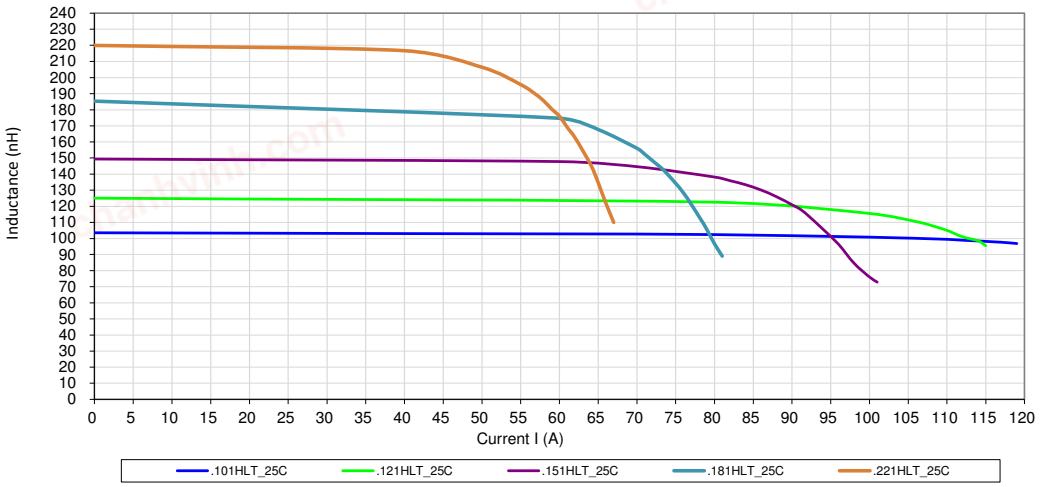

PAL6373.XXXHLT, L vs I, Curve 100°C

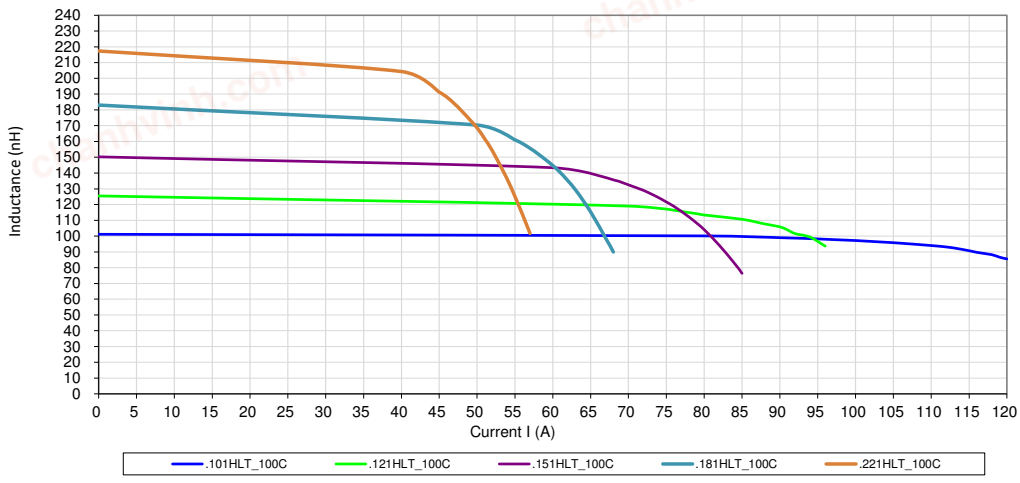

chanhvinh.com

SMT Power Inductors

Power Beads - PAL6373.XXXHLT Series

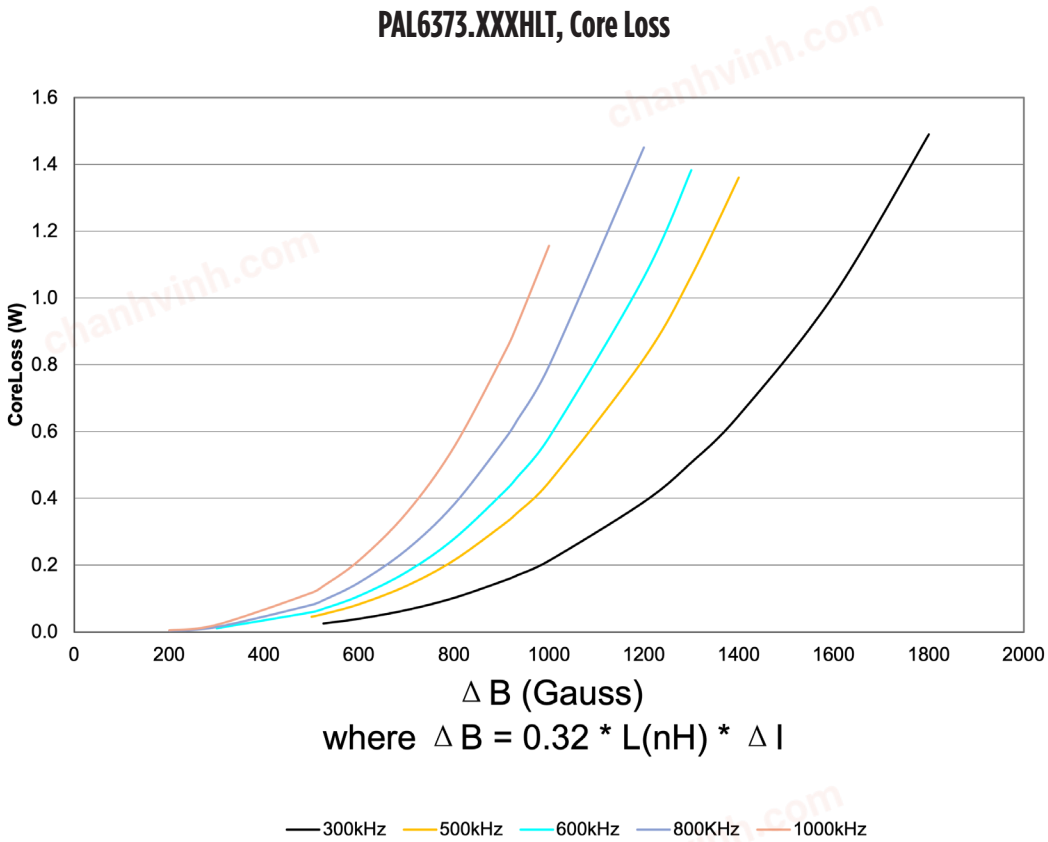

chanhvinh.com

For More Information:

Americas - prodinfo_power_americas@yageo.com | **Europe -** prodinfo_power_emea@yageo.com | **Asia -** prodinfo_power_asia@yageo.com

Performance warranty of products offered on this data sheet is limited to the parameters specified. Data is subject to change without notice. Other brand and product names mentioned herein may be trademarks or registered trademarks of their respective owners. © Copyright, 2023. Pulse Electronics, Inc. All rights reserved.

YAGEO Corporation and its affiliates do not recommend the use of commercial or automotive grade products for high reliability applications or manned space flight.