chanhvinh.com

SMT POWER INDUCTORS

Wire Wound - PA2729.XXXNL Series

Pulse Electronics

RoHS COMPLIANT

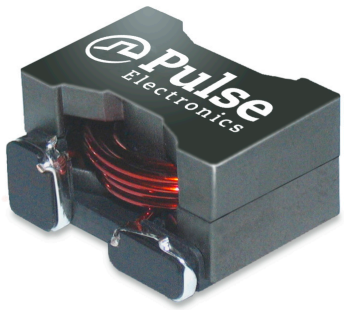

- ***Height:*** *12.2mm Max*
- ***Footprint:*** *22.2 x 19.1mm Max*
- ***Current Rating:*** *Over 20Apk*
- ***Inductance Range:*** *4.7µH to 60µH*
- *Higher Efficiency Version of PA2050.XXXNL Series in same footprint*

Electrical Specifications @ 25°C – Operating Temperature -55°C to +130°C

Part[6] Number	Inductance @ 0Adc (µH +/-15%)	Inductance @ Irated (µH TYP)	Irated[1] (A_{DC})	DCR (mΩ±10%)	Saturation Current Isat (A TYP)		Heating[3] Current I_{DC} (A TYP)	Core Loss Factor K2
					25°C	100°C		
PA2729.502NL	4.9	4.7	16.4	3.4	20.9	17.1	16.4	158
PA2729.602NL	6.0	5.7	14.4	4.4	19.6	16.1	14.4	155
PA2729.802NL	8.3	7.9	13.3	5.1	16.8	13.8	13.3	181
PA2729.113NL	10.9	10.5	12.5	5.8	14.7	12.1	12.5	206
PA2729.173NL	17.1	16.8	9.9	9.1	11.7	9.6	9.9	258
PA2729.203NL	20.7	20.1	8.5	12.0	10.7	8.8	8.5	284
PA2729.243NL	24.5	23.0	8.1	12.5	9.8	8.0	8.1	310
PA2729.283NL	28.1	27.8	7.8	14.0	9.0	7.4	7.8	335
PA2729.333NL	32.9	31.5	6.7	18.5	8.4	6.9	6.7	361
PA2729.383NL	38.3	37.2	6.5	19.7	7.8	6.4	6.5	387
PA2729.443NL	44.0	42.0	6.2	21.5	7.3	6.6	6.2	413
PA2729.603NL	60.3	57.5	5.1	31.5	6.2	6.1	5.1	490

Notes:

1. The rated current as listed is either the saturation current or the heating current depending on which value is lower.
2. The saturation current is the typical current which causes the inductance to drop by 20% at the stated ambient temperatures (25°C and 100°C). This current is determined by placing the component in the specified ambient environment and applying a s hort duration pulse current (to eliminate self-heating effects) to the component.
3. The heating current is the DC current which causes the part temperature to increase by approximately 40°C.
4. In high volt*time applications, additional heating in the component can occur due to core losses in the inductor which may neccessitate derating the current in order to limit the temperature rise of the component. To determine the approximate total losses (or temperature rise) for a given application, the coreloss and temperature rise formula can be used:

   ΔB (Gauss) = K2 * ΔI

   Core Loss (W) = 1.5E-13 * (Freq_kHz) $^{1.63}$ * $\Delta B^{2.62}$
5. The temperature of the component (ambient plus temperature rise) must be within the stated operating temperature range.

chanhvinh.com

SMT POWER INDUCTORS

Wire Wound - PA2729.XXXNL Series

Mechanicals

Schematics

PA2729.XXXNL

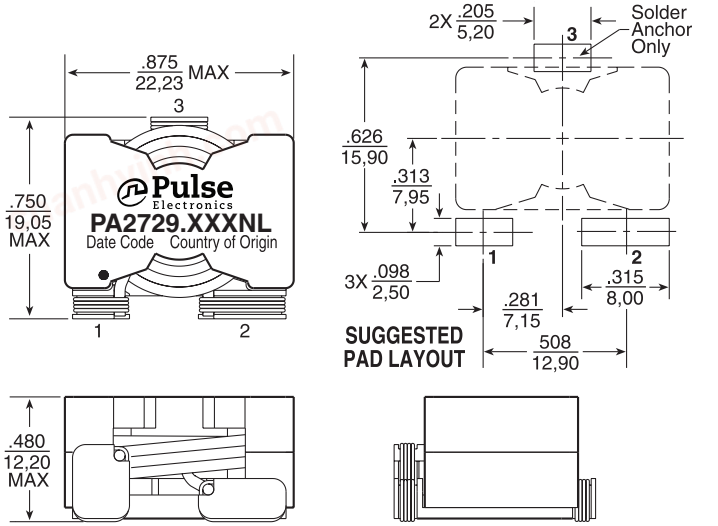

Dimensions: *Inches / mm*

Unless otherwise specified, all tolerances are ± .010 / 0,25

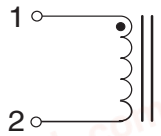

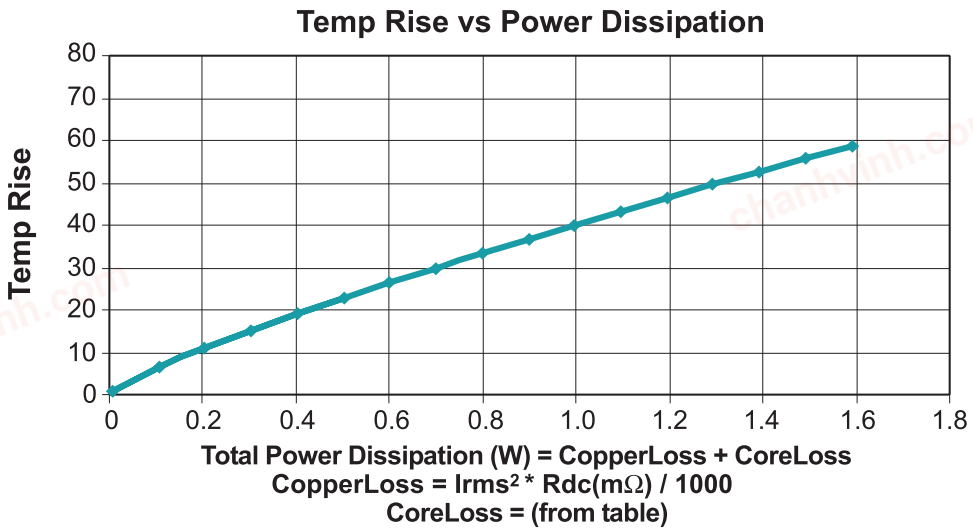

For More Information

Pulse Worldwide Headquarters
12220 World Trade Dr.
San Diego, CA 92128
U.S.A.

Tel: 858 674 8100
Fax: 858 674 8262

Pulse Europe
Einsteinstrasse 1
D-71083 Herrenberg
Germany

Tel: 49 7032 7806

Pulse China Headquarters
B402, Shenzhen Academy of Aerospace Technology Bldg.
10th Kejinan Road
High-Tech Zone
Nanshan District
Shenzen, PR China
518057

Pulse North China
Room 2704/2705
Super Ocean Finance Ctr.
2067 Yan An Road West
Shanghai 200336
China

Pulse South Asia
135 Joo Seng Road
#03-02
PM Industrial Bldg.
Singapore 368363

Tel: 65 6287 8998
Fax: 65 6287 8998

Pulse North Asia
3F, No. 198
Zhongyuan Road
Zhongli City
Taoyuan County 320
Taiwan R. O. C.
Tel: 886 3 4356768
Fax: 886 3 4356823
(Pulse)

Performance warranty of products offered on this data sheet is limited to the parameters specified. Data is subject to change without notice. Other brand and product names mentioned herein may be trademarks or registered trademarks of their respective owners. © Copyright, 2011. Pulse Electronics, Inc. All rights reserved.