chanhvinh.com

SMT Current Sense Transformers

PA1005.XXXNL and PM2165.XXXNL

Pulse a YAGEO company POWER



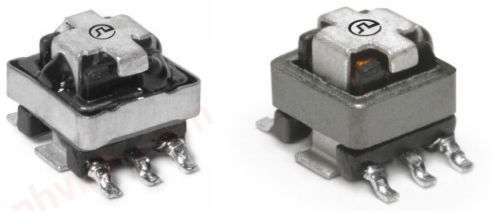

- ***Height:*** *5.5mm Max*
- ***Footprint:*** *8.4mm x 7.2mm Max*
- ***Current Rating:*** *up to 20A*
- ***Frequency Range:*** *20kHz to 1MHz*
- *Low Primary DCR version of P820X*

Electrical Specifications @ 25°C — Operating Temperature -40°C to +130°C

Part Number		Turns Ration	Current Rating[2] (A)	Secondary Inductance (mH MIN)	DCR (mΩ MAX)		Hipot (V_{RMS})
Commerical	Automotive[7]				Primary (8-7)	Secondary (1-3)	
PA1005.020NL	PM2165.020NL	1:20	20	0.08	0.75	550	1000
PA1005.030NL	PM2165.030NL	1:30	20	0.18	0.75	870	1000
PA1005.040NL	PM2165.040NL	1:40	20	0.32	0.75	1140	1000
PA1005.050NL	PM2165.050NL	1:50	20	0.5	0.75	1500	1000
PA1005.060NL	PM2165.060NL	1:60	20	0.72	0.75	2500	1000
PA1005.070NL	PM2165.070NL	1:70	20	0.98	0.75	4750	1000
PA1005.100NL	PM2165.100NL	1:100	20	2.00	0.75	6000	1000
PA1005.125NL	PM2165.125NL	1:125	20	3.00	0.75	7700	500

Notes:

1. The temperature of component (ambient temperature plus temper-ature rise) must be within the specified operating temperature range.
2. The maximum current rating is based upon temperature rise of the component and represents the DC current which will cause a typical temperature rise of 40°C with no airflow.
3. To calculate value of terminating resistor (Rt) use the following formula:
   Rt (W) = Vref * N /(Ipeak_primary)
4. The peak flux density of the device must remain below 2000 Gauss. To calculate the peak flux density for uni-polar current use following formula:
   Bpk = 37.59 * Vref * (Duty_Cycle_Max) * 10^5 / (N * Freq_kHz)
   * for bi-polar current applications divide Bpk (as calculated above) by 2.
5. Optional Tape & Reel packaging can be ordered by adding a "**T**" suffix to the part number (i.e. PA1005.020NL becomes PA1005.020NL**T**). Pulse complies to industry standard tape and reel specification EIA481.
6. The "**NL**" suffix indicates an RoHS-compliant part number. Non-NL suffixed parts are not necessarily RoHS compliant, but are electrically and mechanically equivalent to NL versions. If a part number does not have the "**NL**" suffix, but an RoHS compliant version is required, please contact Pulse for availability.
7. The PM2165.XXXNL part numbers are AEC-Q200 and IATF16949 certified. The mechanical dimensions are 100% tested in production but do not necessarily meet aproduct capability index (Cpk) >1.33 and therefore may not strictly conform to PPAP.

chanhvinh.com

SMT Current Sense Transformers

PA1005.XXXNL and PM2165.XXXNL

Mechanical

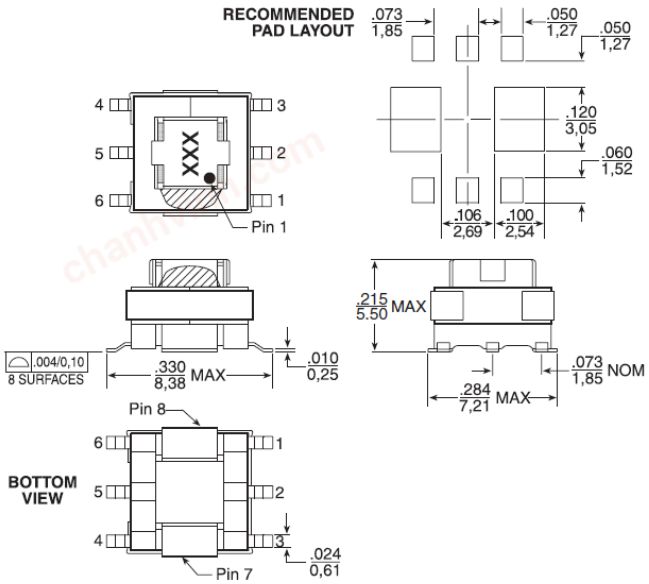

Schematic

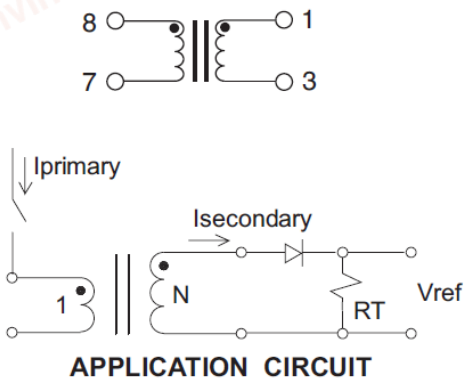

Weight 0.34grams
Tape & Reel 900/reel
Tray 120/tray

Dimensions: Inches / mm
Unless otherwise specified, all tolerances are: ± .010 / 0,25

TAPE & REEL INFO

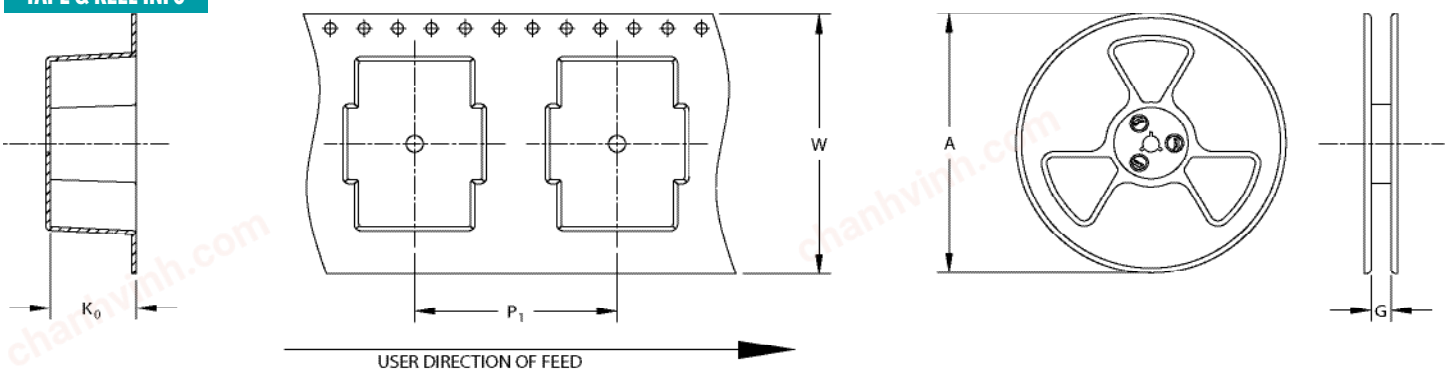

SURFACE MOUNTING TYPE, REEL/TAPE LIST						
PART NUMBER	REEL SIZE (mm)		TAPE SIZE (mm)			QTY
	A	G	P_1	W	K_0	PCS/REEL
PA1005.XXXNLT/PM2165.XXXNLT	Ø330	16.4	12	16	5.65	900

Pulse a YAGEO company POWER