chanhvinh.com

THT/SMT Power Inductors

Toroid - Designed for National's 260kHz Simple Switcher™

Pulse
A YAGEO Company



- *Tested and recommended by National Semiconductor for the LM267X series*
- *Base material meets flammability requirements of UL94V-0*
- *Available in surface mount and through hole versions*

Electrical Specifications @ 25°C - Operating Temperature -40°C to +130°C[7]									
Pulse[5] THT Part Number	Pulse[4,5] SMT Part Number	National Part Number	In Circuit Operating Parameters[1]			Nominal DCR (Ω)	Package		
			Nominal Inductance (µH)	Rated Current (A_{DC})	Max[2] ETop (V-µsec)		Through Hole	Surface Mount	Lead Diameter
P0841NL	-	LM267X-41	22.8	4.9	23.3	.036	KM-3.0	-	.035
P0845NL	-	LM267X-45	10.2	4.3	10.0	.026	KM-1.1	-	.031
P0846NL	-	LM267X-46	14.8	5.0	17.0	.023	KM-2.1	-	.035
P0847NL	-	LM267X-47	10	5.0	13.0	.025	KM-2.0	-	.031
P0848NL	-	LM267X-48	50	5.0	40.0	.050	KM-4.0	-	.039
P0849NL	-	LM267X-49	33	5.0	36.0	.047	KM-4.0	-	.035
P0850NL	-	LM267X-50	23	5.0	24.0	.026	KM-3.0	-	.043
-	**P0841SNL**	LM267X-41	22.8	4.9	23.3	.036	-	HCI-68	-
-	**P0845SNL**	LM267X-45	10	4.3	10.0	.050	-	LCI-44	-
-	**P0846SNL**	LM267X-46	15	5.0	17.0	.027	-	LCI-50	-
-	**P0847SNL**	LM267X-47	11	5.0	13.0	.025	-	LCI-50	-
-	**P0848SNL**	LM267X-48	52[6]	5.0	40.0	.025	-	Bigfoot	
-	**P0849SNL**	LM267X-49	36[6]	5.0	36.0	.019	-	Bigfoot	-
-	**P0850SNL**	LM267X-50	24.7[6]	5.0	24.0	.013	-	Bigfoot	-

Notes:

1. Inductance values may vary ±20%.
2. ETop rated at 260kHz.
3. SIMPLE SWITCHER™ is a trademark of National Semiconductor Corporation.
4. For SMT parts, optional Tape & Reel packaging can be ordered by addin a "T" suffix to the part number(i.e. P0841SNL becomes P0841SNLT). Pulse complies to industry standard tape and reel specification EIA481.
5. The "**NL**" suffix indicates an RoHS-compliant part number. Non-NL suffixed parts are not necesssarily RoHS-compliant, but are electrically and mechanically equivalent to NL versions. If a part number does not have the "**NL**" suffix, but an RoHS compliant version is required, please contact Pulse for availability.
6. Series connection (pins 2-4 connected)
7. The temperature of the component (ambient plus temperature rise) must be within the stated operating temperature range.

chanhvinh.com

THT/SMT Power Inductors

Toroid - Designed for National's 260kHz Simple Switcher™

Mechanicals

KlipMount™ Series

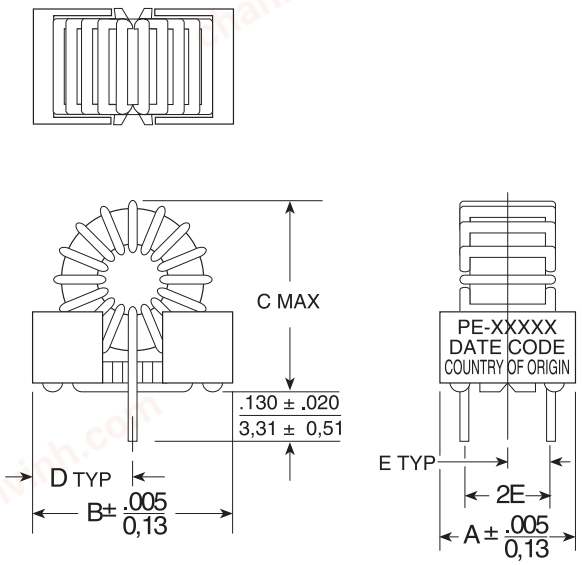

PKG	A	B	C	D	E
KM-1.1	.350 8,89	.580 14,74	.715 18,17	.290 7,37	.110 2,80
KM-2.0	.450 11,43	.650 21,08	.700 17,78	.325 8,26	.150 3,81
KM-2.1	.460 11,69	.670 17,02	.750 19,05	.335 8,51	.150 3,81
KM-3.0	.450 11,43	.830 21,09	.950 24,13	.415 10,55	.150 3,81
KM-4.0	.600 15,24	.950 24,13	1.350 34,29	.475 12,07	.225 5,72

Dimensions: Inches / mm
Unless otherwise specified,
all tolerances are: ± .010 / 0,25

Mechanicals

LCI Series

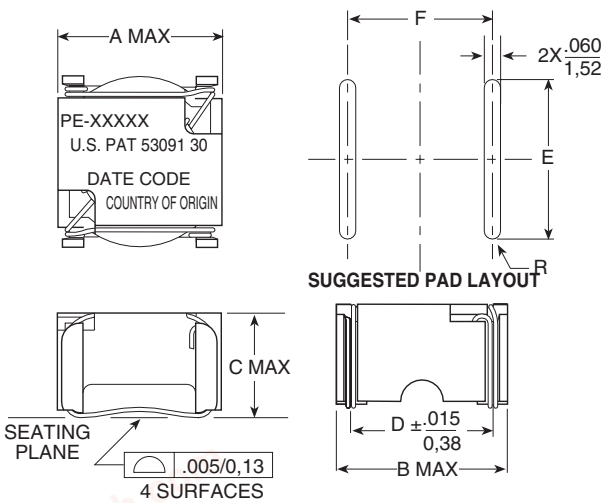

PKG	A	B	C	D	F	G
LCI-44	.600 15,24	.620 15,75	.390 9,91	.500 12,70	.550 13,97	.510 12,95
LCI-50	.670 17,02	.700 17,78	.390 9,91	.580 14,74	.620 15,75	.590 14,99

Notes:
1. Dimension "D" is measured across terminal blocks only.
2. Coil must clear seating plane by .010 / 0,25 MIN

	LCI-44	LCI-50
Weight	3.6 grams	4.8 grams
Tape & Reel	200/reel	200/reel
Tube	30/tube	30/tube

chanhvinh.com

THT/SMT Power Inductors

Toroid - Designed for National's 260kHz Simple Switcher™

Mechanicals

HCI-68

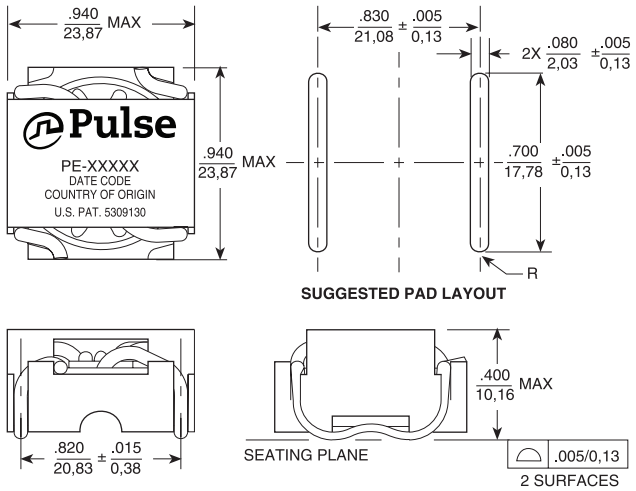

Weight ..... 12.1 grams
Tape & Reel 100/reel
Tube 40/tube

Mechanicals/Schematic

Bigfoot

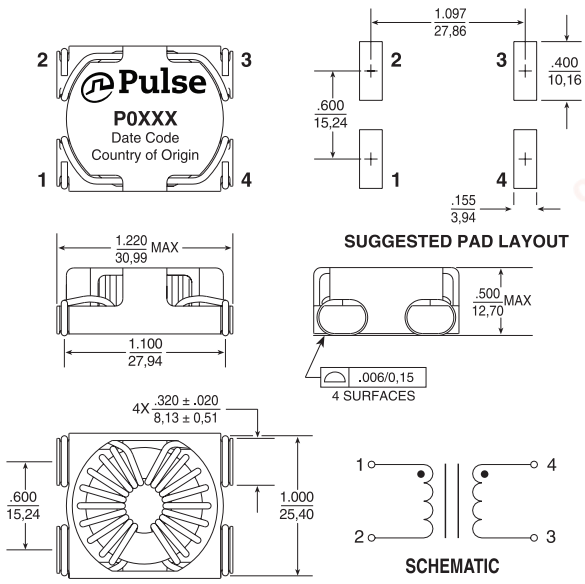

Weight 18grams
Tape & Reel 20/reel
Tube 75/tube

For More Information

Pulse Worldwide Headquarters
15255 Innovation Drive Ste 100
San Diego, CA 92128
U.S.A.
Tel: 858 674 8100
Fax: 858 674 8262

Pulse Europe
Pulse Electronics GmbH
Am Rottland 12
58540 Meinerzhagen
Germany
Tel: 49 2354 777 100
Fax: 49 2354 777 168

Pulse China Headquarters
Pulse Electronics (ShenZhen) CO., LTD
D708, Shenzhen Academy of
Aerospace Technology,
The 10th Keji South Road,
Nanshan District, Shenzhen,
P.R. China 518057
Tel: 86 755 33966678
Fax: 86 755 33966700

Pulse North China
Room 2704/2705
Super Ocean Finance Ctr.
2067 Yan An Road West
Shanghai 200336
China
Tel: 86 21 62787060
Fax: 86 2162786973

Pulse South Asia
3 Fraser Street 0428
DUO Tower
Singapore 189352
Tel: 65 6287 8998
Fax: 65 6280 0080

Pulse North Asia
1F., No.111 Xiyuan Road
Zhongli District
Taoyuan City 32057
Taiwan (R.O.C)
Tel: 886 3 4356768
Fax: 886 3 4356820

Performance warranty of products offered on this data sheet is limited to the parameters specified. Data is subject to change without notice. Other brand and product names mentioned herein may be trademarks or registered trademarks of their respective owners. © Copyright, 2019. Pulse Electronics, Inc. All rights reserved.