chanhvinh.com

SMT Power Inductors

Unshielded Drum Core - P0751NL/52NL Series

Pulse A YAGEO Company



- ***Height:*** *5.5mm Max*
- ***Footprint:*** *13.0mm x 9.4mm Max*
- ***Current Rating:*** *up to 6.8A*
- ***Inductance Range:*** *1.0µH to 1000µH*

Electrical Specifications @ 25°C – Operating Temperature -40°C to +130°C

Part [6,7] Number	Inductance @ I_{PK} A_{DC} (µH ± 20%)	Irated [5] (A)	DCR (MAX) (mΩ)	Saturation Current (A) @ 25°C	Heating Current (A)
P0751.102	1.0	6.8	10	9.0	6.8
P0751.152	1.5	6.4	12	8.0	6.4
P0751.222	2.2	6.1	15	7.0	6.1
P0751.332	3.3	5.4	18	6.4	5.4
P0751.472	4.7	4.8	33	5.4	4.8
P0751.682	6.8	4.4	44	4.6	4.4
P0751.103	10	3.8	50	3.8	3.9
P0751.153	15	3.0	55	3.0	3.1
P0751.223	22	2.6	114	2.6	2.7
P0751.333	33	2.0	120	2.0	2.1
P0751.473	47	1.6	168	1.6	1.8
P0751.683	68	1.4	240	1.4	1.5
P0752.104	100	1.2	380	1.2	1.3
P0752.154	150	1.0	570	1.0	1.0
P0752.224	220	0.8	840	0.8	0.8
P0752.334	330	0.6	1020	0.6	0.6
P0752.474	470	0.5	1460	0.5	0.5
P0752.684	680	0.4	2170	0.4	0.4
P0752.105	1000	0.3	3300	0.3	0.3

Notes:

1. The temperature of the component (ambient plus temperature rise) must be within the specified operating temperature range.
2. Inductance tested at 100kHz, 10mV$_{RMS}$
3. Inductance drop = 10% typical at the Saturation Current
4. ΔT = 15°C rise typical at the Heating Current
5. The rated current is the lower of the saturation or heating current
6. Optional Tape & Reel packaging can be ordered by adding a "**T**" suffix to the part number (i.e. P0751.102NL becomes P0751.102NL**T**). Pulse complies to industry standard tape and reel specification EIA481.
7. The "**NL**" suffix indicates an RoHS-compliant part number. Non-NL suffixed parts are not necessarily RoHS compliant, but are electrically and mechanically equivalent to NL versions. If a part number does not have the "**NL**" suffix, but an RoHS compliant version is required, please contact Pulse for availability.

chanhvinh.com

SMT Power Inductors

Unshielded Drum Core - P0751NL/52NL Series

Mechanical

P0751.XXX/P0752.XXX

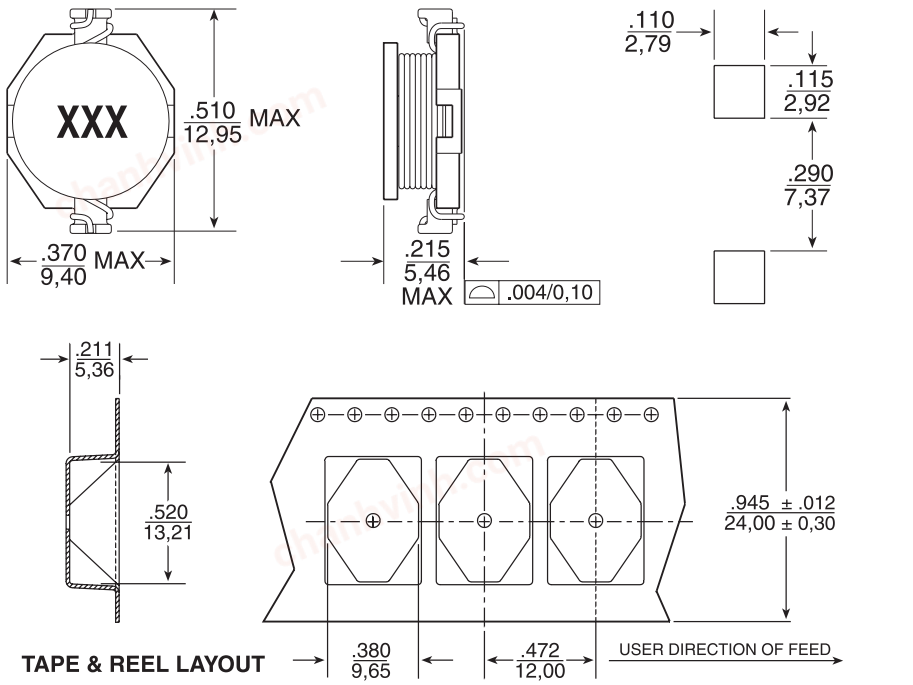

Schematic

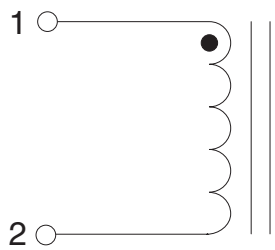

Weight .....0.8 grams
Tape & Reel 800/reel

Dimensions: Inches / mm

Unless otherwise specified, all tolerances are ± .010 / 0,25

For More Information

Pulse Worldwide Headquarters
15255 Innovation Drive Ste 100
San Diego, CA 92128
U.S.A.
Tel: 858 674 8100
Fax: 858 674 8262

Pulse Europe
Pulse Electronics GmbH
Am Rottland 12
58540 Meinerzhagen
Germany
Tel: 49 2354 777 100
Fax: 49 2354 777 168

Pulse China Headquarters
Pulse Electronics (ShenZhen) CO., LTD
D708, Shenzhen Academy of Aerospace Technology,
The 10th Keji South Road,
Nanshan District, Shenzhen,
P.R. China 518057
Tel: 86 755 33966678
Fax: 86 755 33966700

Pulse North China
Room 2704/2705
Super Ocean Finance Ctr.
2067 Yan An Road West
Shanghai 200336
China
Tel: 86 21 62787060
Fax: 86 2162786973

Pulse South Asia
3 Fraser Street 0428
DUO Tower
Singapore 189352
Tel: 65 6287 8998
Fax: 65 6280 0080

Pulse North Asia
1F., No.111 Xiyuan Road
Zhongli District
Taoyuan City 32057
Taiwan (R.O.C)
Tel: 886 3 4356768
Fax: 886 3 4356820

Performance warranty of products offered on this data sheet is limited to the parameters specified. Data is subject to change without notice. Other brand and product names mentioned herein may be trademarks or registered trademarks of their respective owners. © Copyright, 2019. Pulse Electronics, Inc. All rights reserved.