chanhvinh.com

Common Mode Chokes
SMT Toroidal - CMTC and CMTA Series



- *Wide variety of package sizes available*
- *Current Rating: 0.5Arms to 16Arms*
- *Inductances Range: 61uH to 22mH*
- *Dielectric strength: 1500Vrms*
- *Insulation: Functional*
- *Voltage Rating: Up to 800Vdc*

Electrical Specifications @ 25°C - Operating Temperature -40°C to +125°C[5]									
Part Number		Irated[1] (A)	Inductance (uH +/-35%)[4]	DCR per winding (mOhms Max)	Leakage Inductance (uH Typ)	Capacitance (pF Typ)	Self Resonant Frequency (MHz Typ)	Impedance at SRF (KΩ Typ)	Voltage Rating (Vdc)
Commercial	Automotive								
Low Shasta - Size: 9.1mm x 8.9mm x 3.8mm MAX, Weight: 0.3g MAX									
PA2741NL	PM2741NL	1.4	94**	30	0.3	3.9	15	0.45	500
High Shasta - Size: 9.1mm x 8.9mm x 7.9mm MAX, Weight: 0.6g MAX									
PA2742NL	PM2742NL	1.0	397**	92	0.8	7.8	6	1.5	500
Polecat - Size: 13.5mm x 13.5mm x 5.6mm MAX, Weight: 1.7g MAX									
P0354NL	PM0354NL	1.2	1,170	200	9.0	7.0	3	8.20	400
P0473NL	PMC0473NL	1.5	880	110	6.0	6.9	4	6.76	400
PA2748NL	PM2748NL	2.3	1,125**	55	4.2	7.5	4	3.20	400
PA2743NL	PMC2743NL	4.3	383**	18	1.8	4.6	2.5	1.40	400
PA2744NL	PM2744NL	4.8	280**	13.2	1.1	6.2	2	1.00	400
PA2745NL	PM2745NL	5.8	130**	6.75	0.7	4.4	3	0.50	400
PA2746NL	PM2746NL	8.5	96**	4.3	0.4	4.3	4	0.35	400
PA2747NL	PM2747NL	11	61**	2.9	0.3	4.3	4	0.20	400
Polecat-HP - Size: 13.0mm x 13.0mm x 8.6mm Weight: MAX, 2.5g MAX									
PA3927NL	PM3927NL	3.3	800**	27	2.5	3.9	1.6	3.00	400
LCCI-37 - Size: 16.4mm x 14.2mm x 8.9mm Weight: MAX, 2.4g MAX									
PE-53914NL	PM53914NL	0.5	22,000*	850	59	8.6	0.51	23.0	800
PE-53913NL	PM53913NL	0.8	10,000*	450	43	6.3	0.46	20.0	800
PE-53911NL	PM53911NL	2.1	1,500*	60	4.3	4.2	3	2.80	800
PA2749NL	PM2749NL	4.2	536**	17.1	1.7	4.3	2	1.40	400
LCCI-44LP - Size: 18.2mm x 15.0mm x 7.6mm Weight: MAX, 3.0g MAX									
PA2751NL	PM2751NL	4.2	486**	16	1.8	3.9	2	1.50	400
LCCI-44 - Size: 18.2mm x 15.0mm x 10mm MAX, Weight: 3.5g MAX									
PA2750NL	PM2750NL	6.5	400**	9.4	1.4	4.8	2.6	1.10	400

chanhvinh.com

Common Mode Chokes
SMT Toroidal - CMTC and CMTA Series

Electrical Specifications @ 25°C - Operating Temperature -40°C to +125°C[5]									
Part Number		Irated[1] (A)	Inductance (uH +/-35%)[4]	DCR per winding (mOhms Max)	Leakage Inductance (uH Typ)	Capacitance (pF Typ)	Self Resonant Frequency (MHz Typ)	Impedance at SRF (KΩ Typ)	Voltage Rating (Vdc)
Commercial	Automotive								
LCCI-50 - Size: 19.6mm x 17.0mm x 9.9mm MAX, Weight: 5.0g MAX									
PA2752NL	**PM2752NL**	1.4	10,150**	210	41	11	0.3	27.5	400
PE-53912NL	**PM53912NL**	2.1	3,000*	80	9.7	6.7	2	5.00	800
P0351NL	**PM0351NL**	2.3	1,470	80	11	13	2	11.7	400
P0420NL	**PM0420NL**	2.8	1,320	60	9.6	11	2.5	9.60	400
P0421NL	**PM0421NL**	2.8	220	60	9.1	2.1	6.2	8.00	400
PE-53910NL	**PM53910NL**	3.6	1,000*	50	3.1	5.1	8	1.80	800
P0422NL	**PM0422NL**	4.0	770	40	5.4	8.2	2.4	5.60	400
P0353NL	**PM0353NL**	5.0	590	21	4.6	7.8	2.8	4.90	400
PA2756NL	**PM2756NL**	8.0	484**	7.7	2.5	5.3	4.2	1.00	600
PA2753NL	**PM2753NL**	13	95**	3	0.5	2.2	1.7	0.34	600
Makeni - Size: 21.1mm x 19.1mm x 11.2mm MAX, Weight: 6.2g MAX									
PA2754NL	**PM2754NL**	12	215**	3.75	1.3	2.5	2.2	0.68	600
PA2755NL	**PM2755NL**	17	117**	1.95	0.5	4.0	1.8	0.35	600
HCCI-68 - Size: 28.2mm x 25.8mm x 10.0mm MAX, Weight: 7.3g MAX									
P0527NL	PM0527NL	6.0	530	15	5.0	6.9	3.1	3.70	400
HCCI-80 - Size: 31.0mm x 25.8mm x 12.7mm, Weight: 17.8g MAX									
P0429NL	**PM0429NL**	7.8	810	14	8.8	11.4	1.7	7.00	600
PA2757NL	**PM2757NL**	8.5	1,030**	9.75	4.9	7.6	1.0	2.70	600
P0469NL	**PM0469NL**	8.8	630	10	6.6	9.6	1.8	4.50	600
P0502NL	**PM0502NL**	12	470	8	5.7	10.1	2.5	3.60	600
PA2670NL	**PM2670NL**	15	500**	4.25	2.7	8.1	1.4	1.30	600
PG1265NL	**PM1265NL**	16	380**	4.1	2.9	5.8	4.6	0.55	600

NOTE:

1. The current rating (Irated) is based upon the temperature rise of the component and represents the rms current which will cause a typical temperature rise of 50C with free air cooling
2. The temperature of the component (ambient plus temperature rise) must be within the stated operating temperature range.
3. Optional Tape & Reel packaging can be ordered by adding a "T" suffix to the part number (i.e. PA2741NL becomes PA2741NLT). Pulse complies to industry standard tape and reel specification EIA481.
4. Inductance values shown are all nominal +/- 35% tolerance, except those identified with an asterisk (*), where the tolerance is -40% min, and with an double asterisk (**) where the tolerance is -40% min just for the automotive grade version.
5. The automotive parts in bold font have completed AEC-Q200 qualified and have been launched on an IATF certified production line. The parts in regular font are considered AEC-Q200 compliant based on qualification testing of various designs on these platforms. However, the IATF launch per the Advanced Product Quality Planning (APQP) procedure has not yet been completed.
6. Please contact Pulse Electronics if a part is selected for automotive application to ensure APQP and PPAP delivery can be completed in accordance with project milestones. Note that Pulse applies standard AEC-Q200 qualification. If a customer has a vibration requirement beyond this, Pulse may not be able to confirm that requirement with this series. The customer should then consider to conduct their own qualification testing and/or glue the component to the PCB.
7. Rated voltage is based on a positive partial discharge test (discharge < 10pC) during the design phase (not production tested) for a repetitive peak voltage (Urp) of this rated voltage. The test condition was with an inception voltage, U1 = 1.25*Urp and an extinction voltage, U2 = 1.1* Urp

chanhvinh.com

Mechanicals

Low Shasta

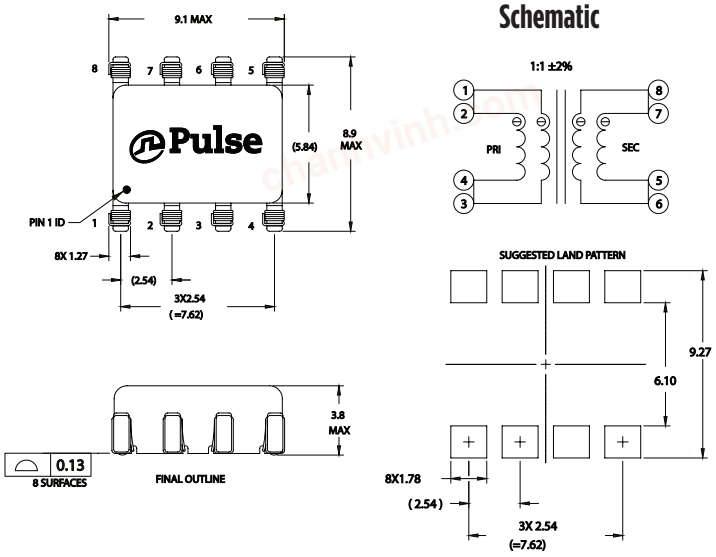

Schematic

High Shasta

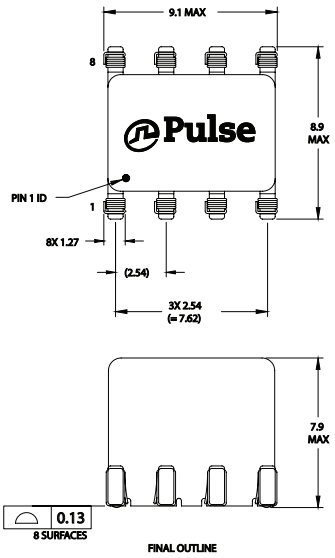

Schematic

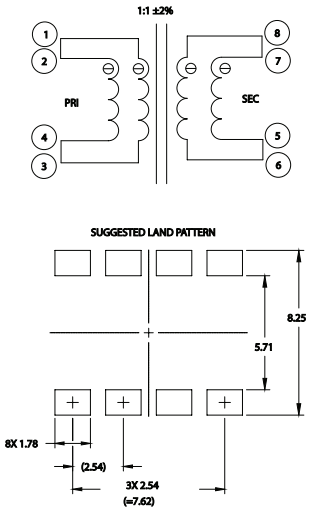

Please note that for PA2741NL and PA2742NL the part should be connected as follows:

Customer to connect pins (1,2) and (4,3) together on board to form a single winding (1,2-4,3).
Customer to connect pins (8,7) and (5,6) together on board to form a single winding (8,7-5,6)
All ratings (leakage and DCR) are with respect to the above winding configuration.

PoleCat

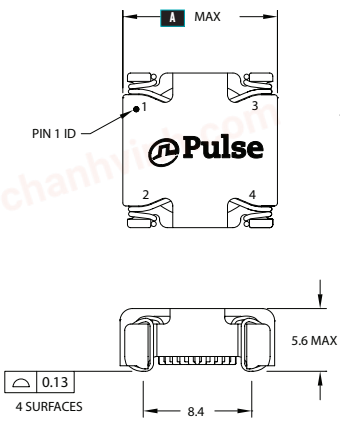

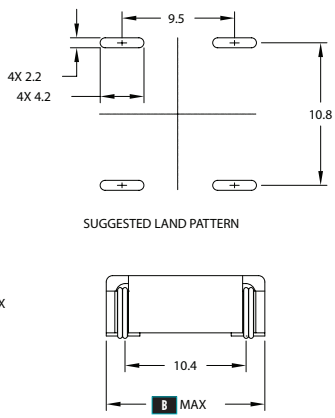

Schematic

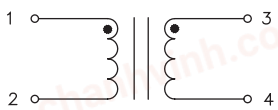

1:1 ±2%

Polecat Dimensions		
Part Number	A	B
P0354NL	12.7	12.7
P0473NL	12.7	12.7
P2748NL	12.7	13.2
PA2743NL	13.0	13.0
PA2744NL	13.0	13.0
PA2745NL	13.2	13.2
PA2746NL	13.2	13.2
PA2747NL	13.5	13.5
PMxxxxNL	13.5	13.5

PoleCat-HP

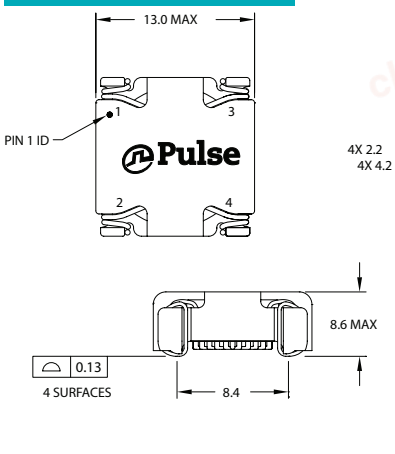

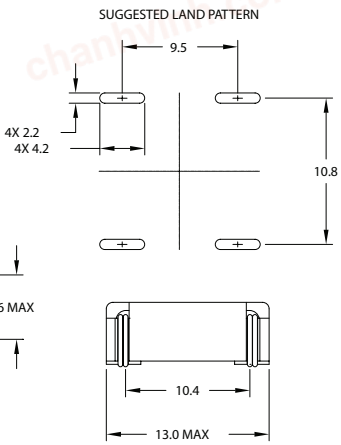

Schematic

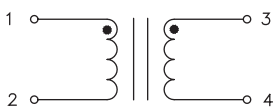

1:1 ±2%

Common Mode Chokes
SMT Toroidal - CMTC and CMTA Series

YAGEO GROUP PULSE

Mechanicals

LCCI-37 - PA2749NL

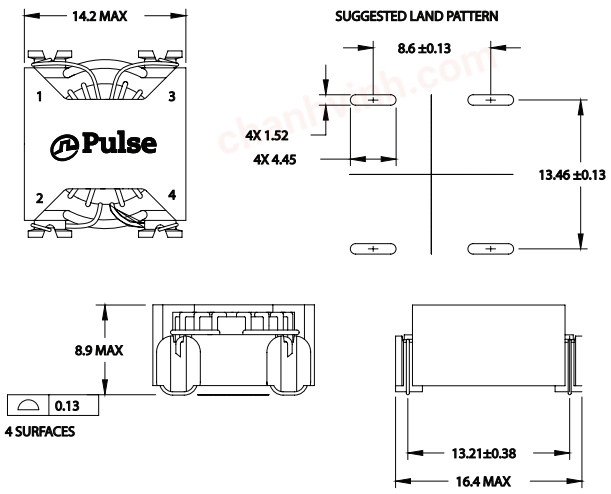

Schematic

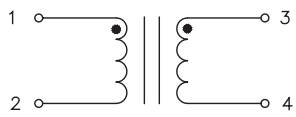

1:1 ±2%

LCCI-37 - PE-539xxNL

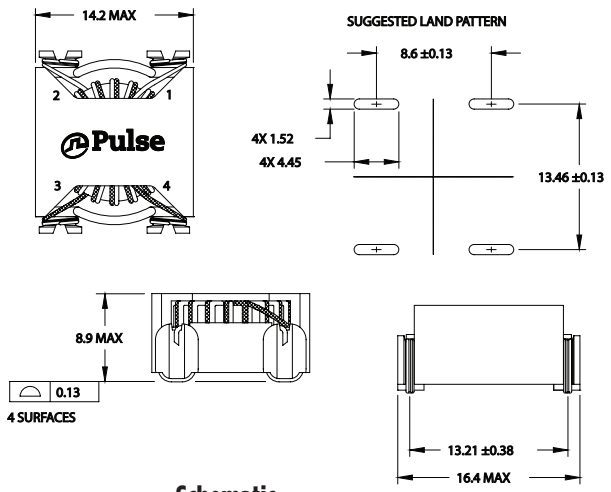

Schematic

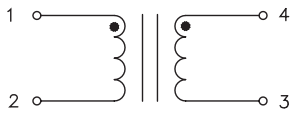

1:1 ±2%

LCCI-44LP

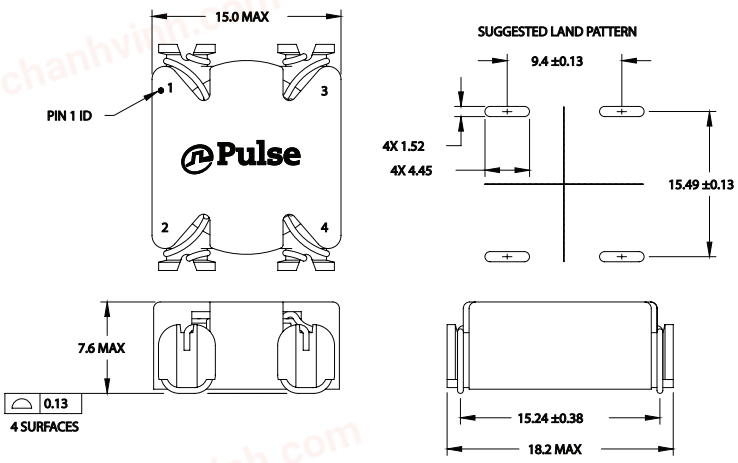

Schematic

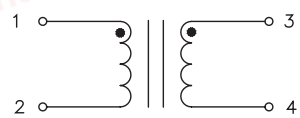

1:1 ±2%

LCCI-44

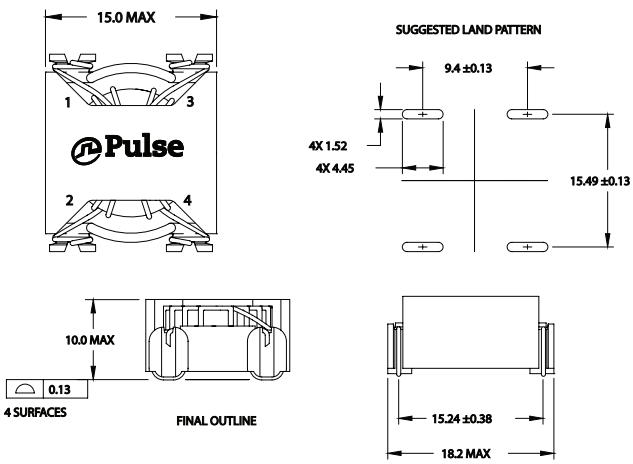

Schematic

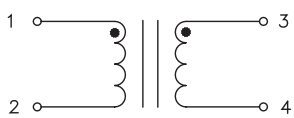

1:1 ±2%

Common Mode Chokes
SMT Toroidal - CMTC and CMTA Series

YAGEO PULSE GROUP

Mechanicals

LCCI-50 - PA2752NL, P0353NL, P0422NL, P0421NL, P0420NL, P0351NL

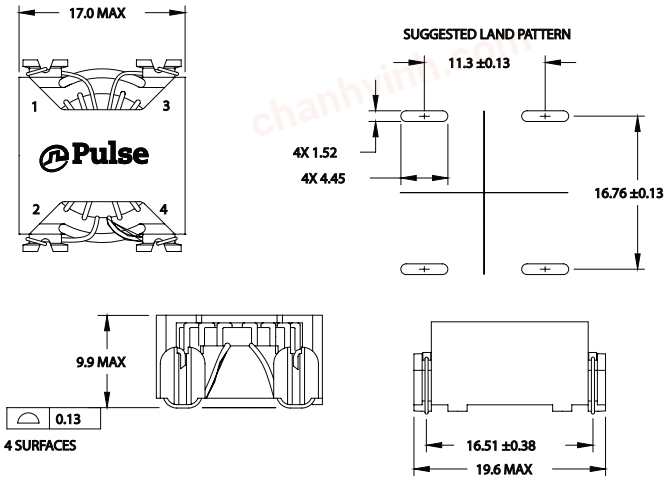

Schematic

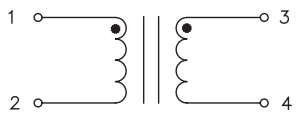

1:1 ±2%

LCCI-50 - PA2753NL, PA2756NL

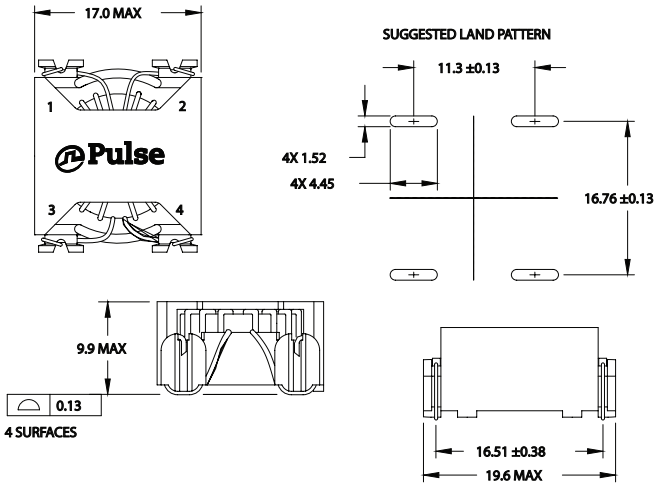

Schematic

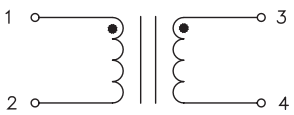

1:1 ±2%

LCCI-50 - PE-539xxNL

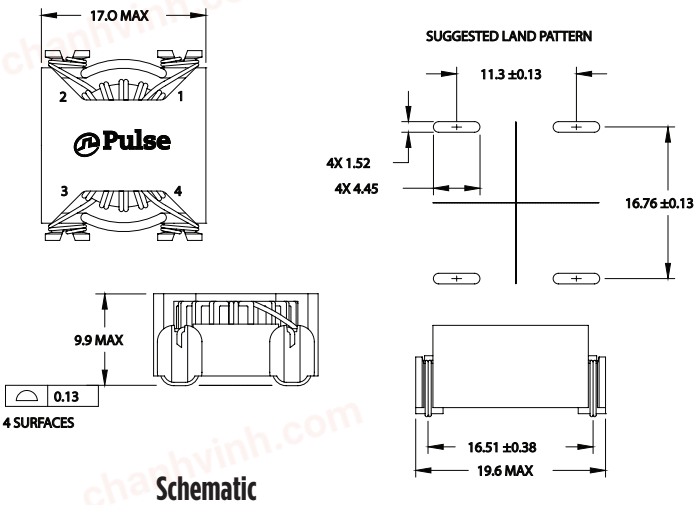

Schematic

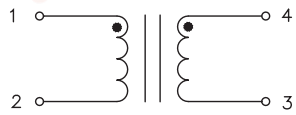

1:1 ±2%

Makeni

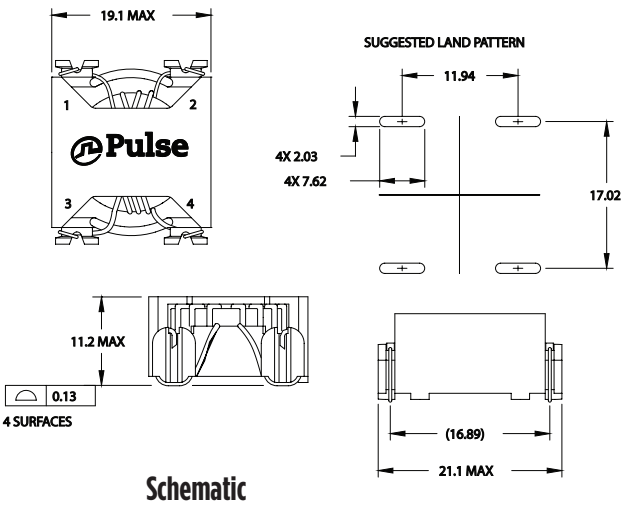

Schematic

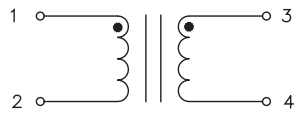

1:1 ±2%

Mechanicals

HCCI-68

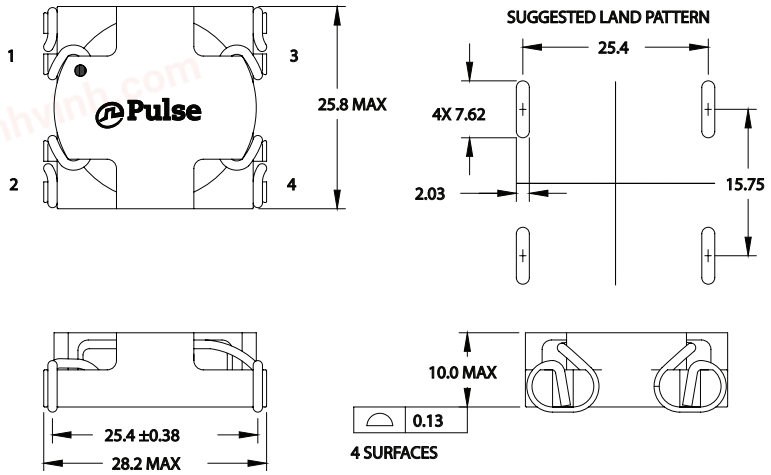

Schematic

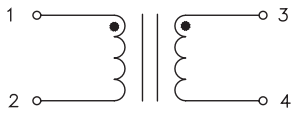

1:1 ±2%

HCCI-80

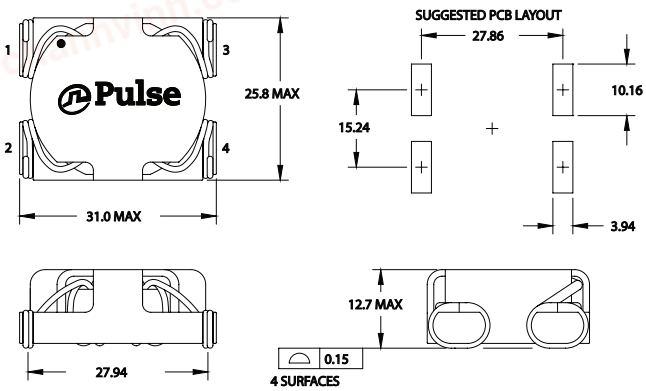

Schematic

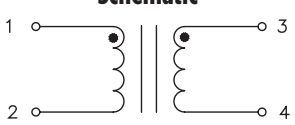

1:1 ±2%

HCCI-80 - PA2757NL

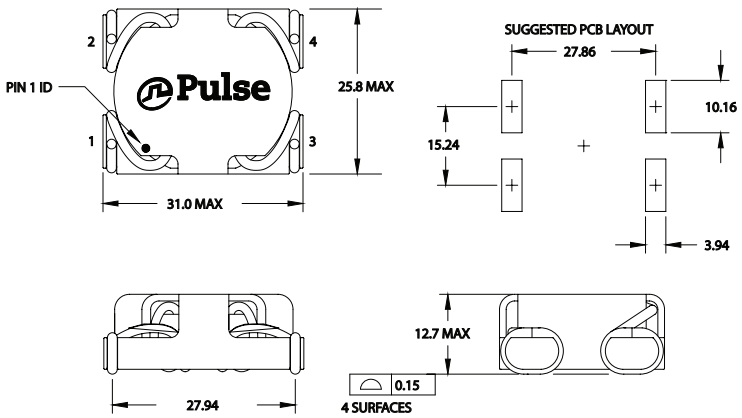

Schematic

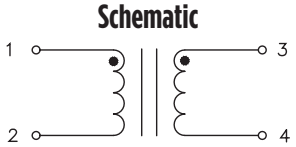

1:1 ±2%

Common Mode Chokes
SMT Toroidal - CMTC and CMTA Series

TAPE & REEL INFO

SURFACE MOUNTING TYPE, REEL/TAPE LIST							
Platform	REEL SIZE (mm)		TAPE SIZE (mm)			QTY	Figure
	A	G	P_1	W	K_0	PCS/REEL	
Low Shasta	330	24.4	12.0	24.0	13.5	1250	1
High Shasta	330	24.4	16.0	24.0	8.13	400	1
Polecat	330	24.4	16.0	24.0	5.6	500	1
Polecat-HP	330	32.4	20.0	32.0	8.35	300	3
LCCI-37 - PA2749NLT	330	24.4	24.0	24.0	9.3	200	2
LCCI-37 - OTHER PARTS	330	24.4	24.0	24.0	9.3	200	1
LCCI-44-LP	330	32.4	24.0	32.0	7.75	300	3
LCCI-44	330	32.4	24.0	32.0	10.3	200	3
LCCI-50 - PE-53910NLT, PE-53912NLT, P0422NLT	330	32.4	24.0	32.0	10.2	200	3
LCCI-50 - OTHER PARTS	330	32.4	24.0	32.0	10.2	200	4
Makeni	330	32.4	24.0	32.0	11.3	150	3
HCCI-68	330	44.4	32.0	44.0	9.9	100	4
HCCI-80 - PA0502NLT, PA2757NLT	330	44.4	40.0	44.0	12.7	75	3
HCCI-80 - OTHER PARTS	330	44.4	40.0	44.0	12.7	75	4

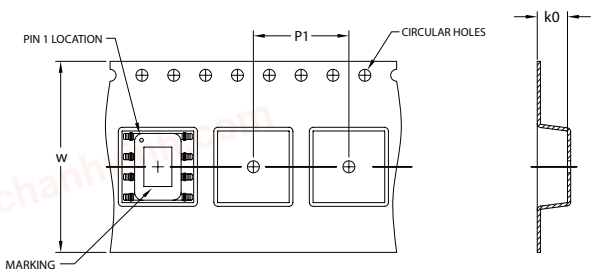

FIGURE 1

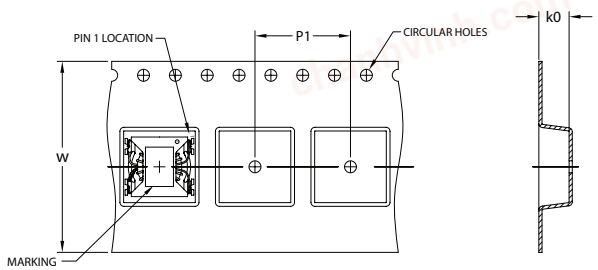

FIGURE 2

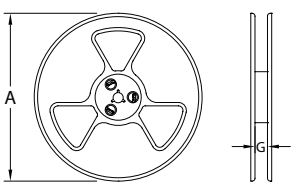

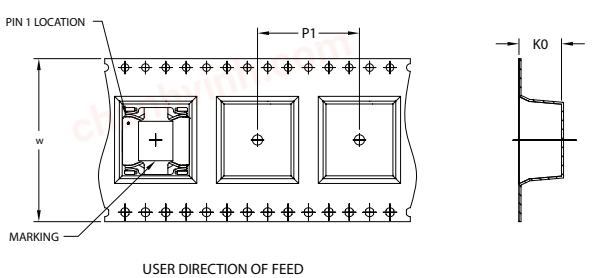

FIGURE 3

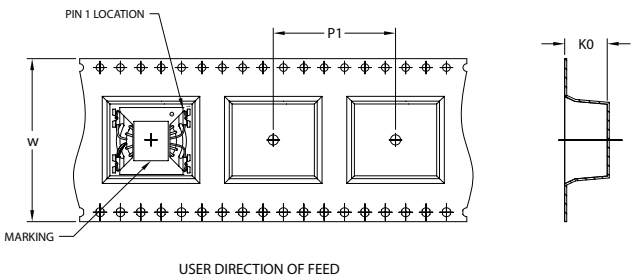

FIGURE 4

Impedance Plots

Low Shasta, High Shasta, LCCI-44

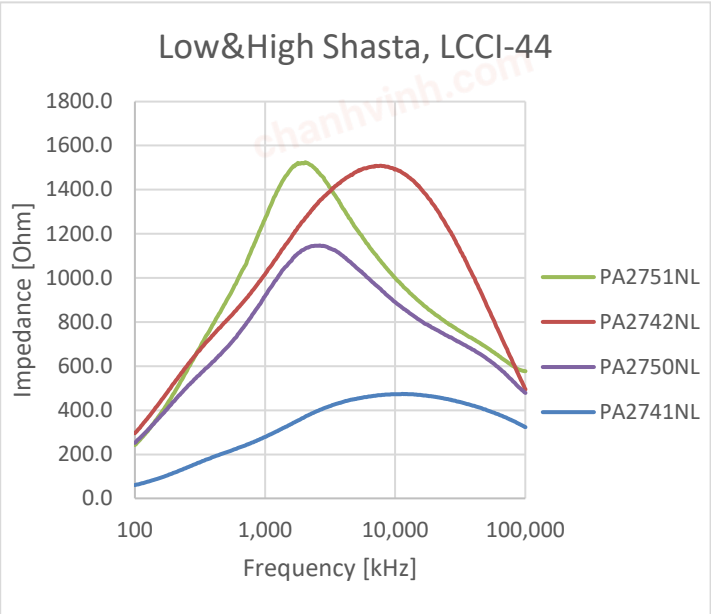

Makeni

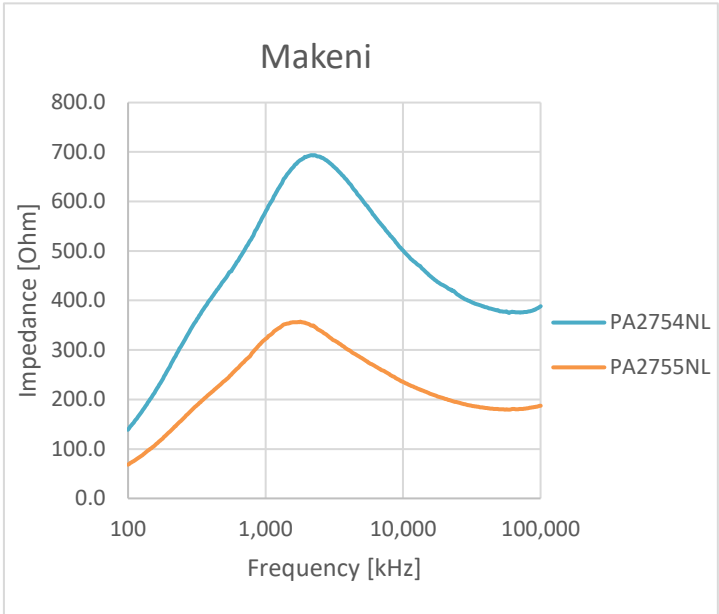

Polecat

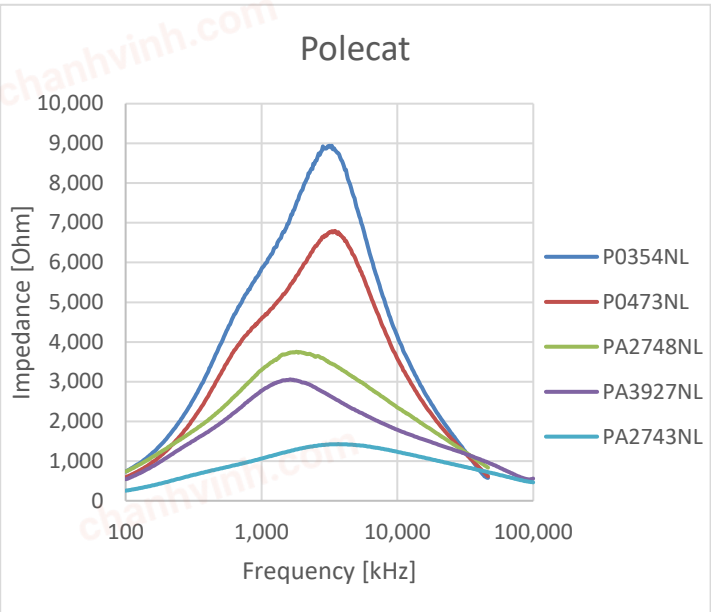

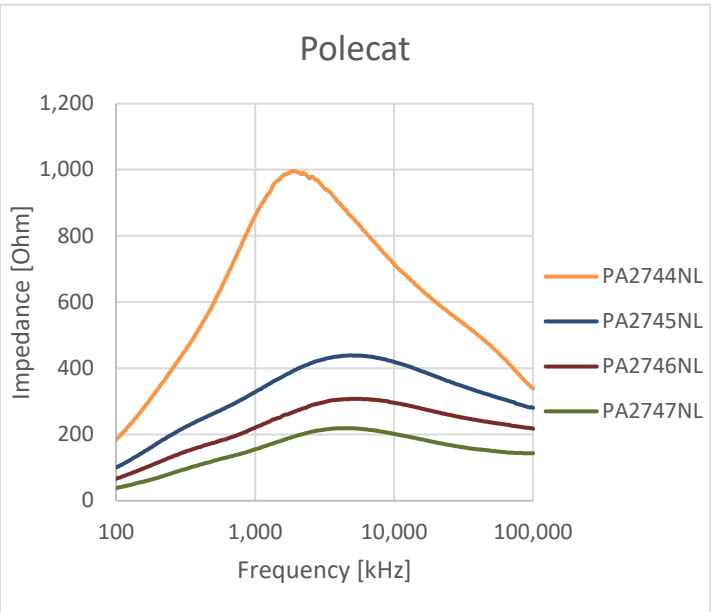

Impedance Plots

LCCI-37

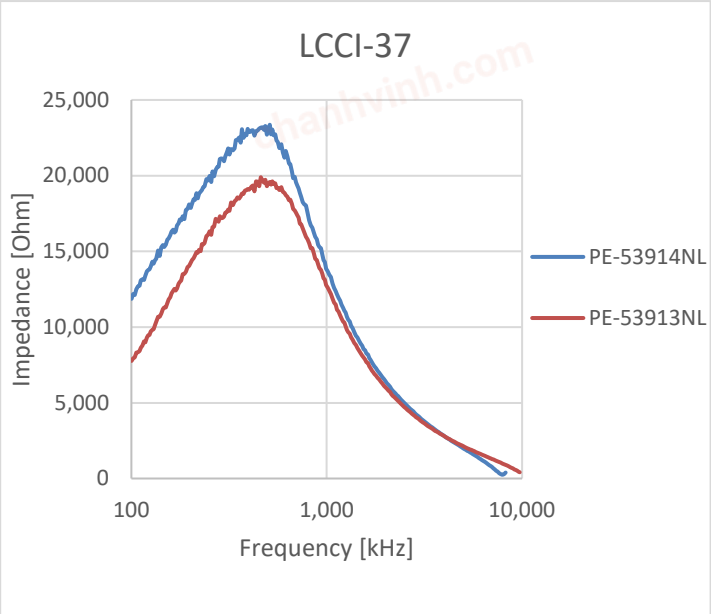

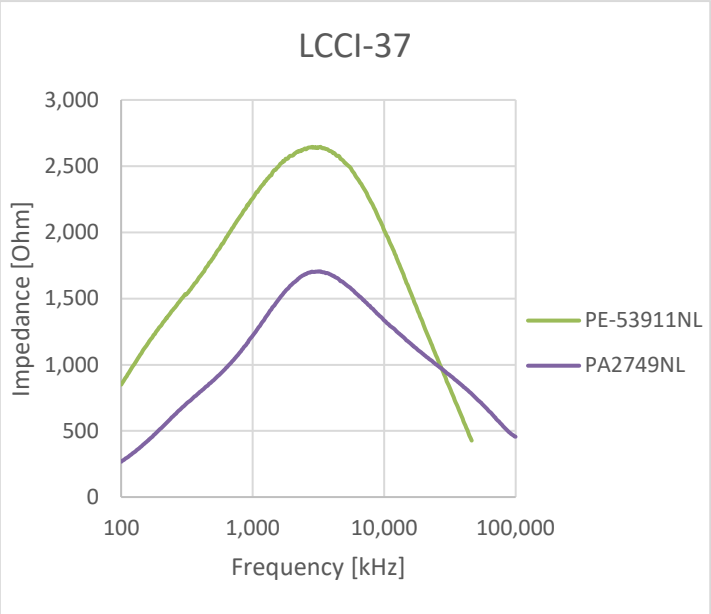

LCCI-50

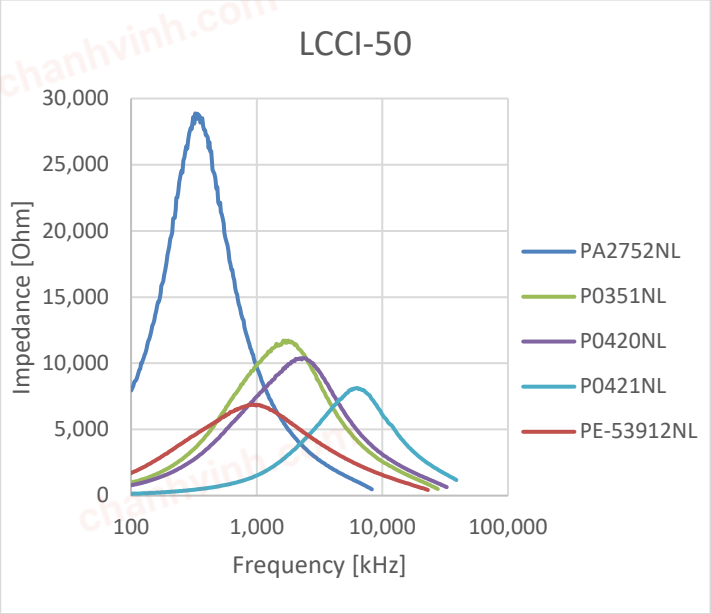

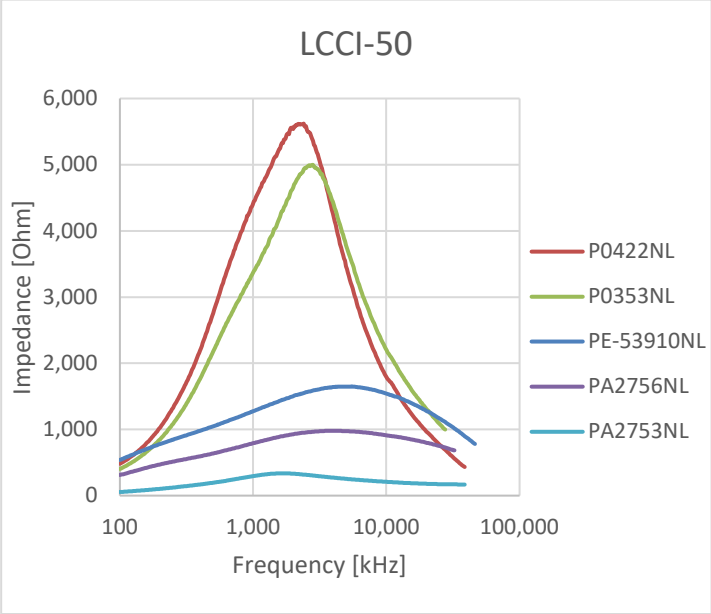

Impedance Plots

HCCI-68, HCCI-80

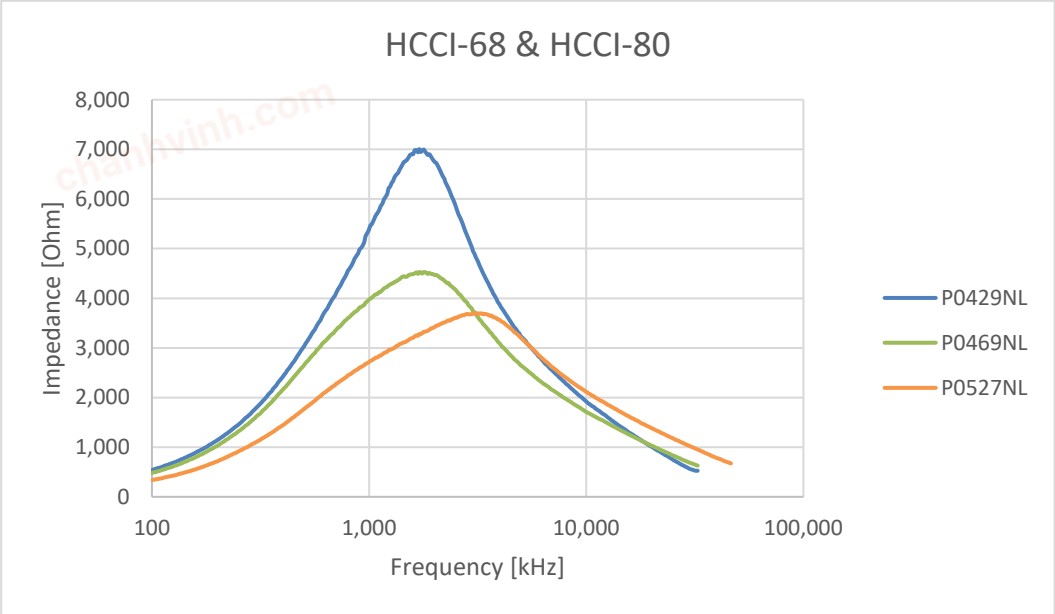

HCCI-80

