chanhvinh.com

Omni DAS Series
Flat Omni SISO 5G Antenna

Part number: OD617-6000S143



Features & Applications:

- *4G / 5G-FR1 617-6000MHz*
- *In-building ceiling mount*
- *Horizontal omni radiation pattern*
- *Low PIM and SAR compliant*
- *Connector 4.3-10-Female as standard*
- *For N-Female connector use P/N: OD617-6000S1NF*
- *Hard ceiling mount kit available on separate request*

ELECTRICAL SPECIFICATION

OD617-6000S143

Frequency range	MHz	617-806	806-960	1350-1550	1690-2700	3300-3800	4900-6000
Gain	dBi	1.5±0.5	2.2±0.5	3.5±0.5	4.5±1	6.0±1	6.0±1
Polarization		Linear					
VSWR		≤1.8		≤1.8		≤1.8	
PIM,3rd order,2x20W	dBc	-153					
Max. input power	W	50					
Impedance	Ohm	50					
SAR compliance		Compliant based on whole-body SAR limit RF Exposure calculation (CEI EN 50383)					

MECHANICAL SPECIFICATIONS

OD617-6000S143

Dimension (Diameter x Height)	Housing Material	Color	Weight	Mounting Kit	
Φ220×18 mm (8.66 x 0.709 inch)	PC/ABS, UV Protected	White	0.3Kg (0.66lbs)	Ceiling, via hole (standard)	

Wireless Technology	No. of Port	Cable Length	Cable Type	Connector Type
5G FR1	1	1Ft (0.3m)	Ø 0.160" low loss	4.3-10-Female

ENVIRONMENTAL SPECIFICATIONS

OD617-6000S143

Operating Temperature	Storage Temperature	RoHS Compliant	Ingress Protection	Warranty
-55 / +60° C	-55 / +60° C	Yes	IP50	2 years

chanhvinh.com

Mechanical Drawing

OD617-6000S143

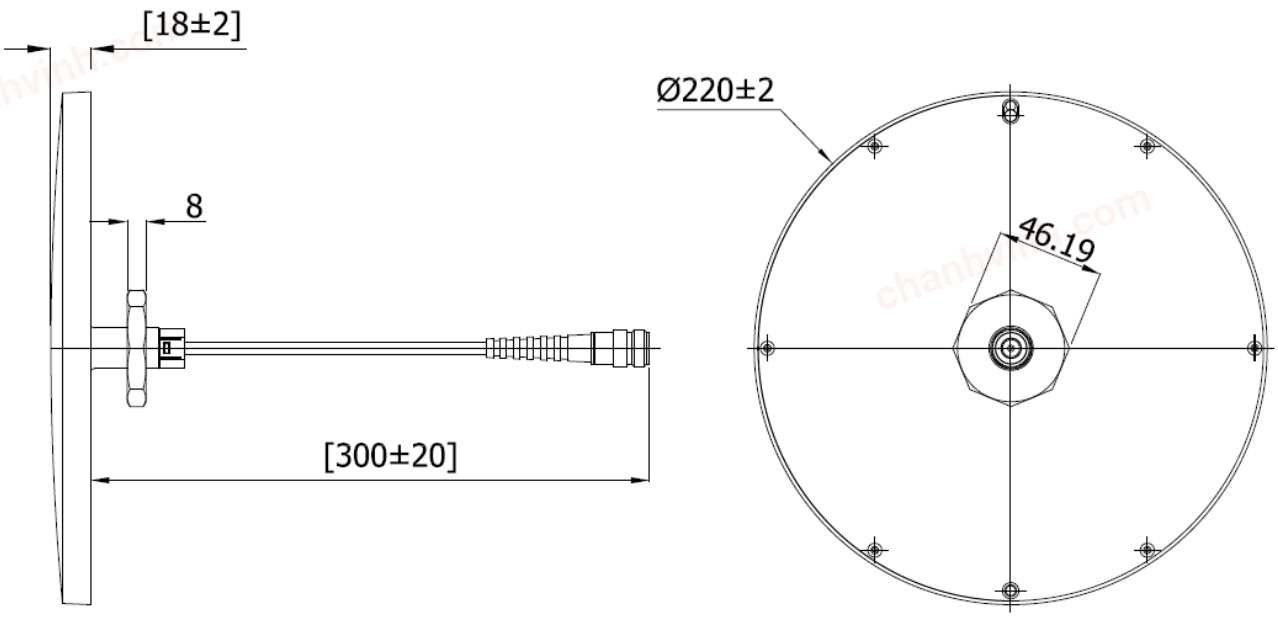

Test Setup

General / Chamber Setup

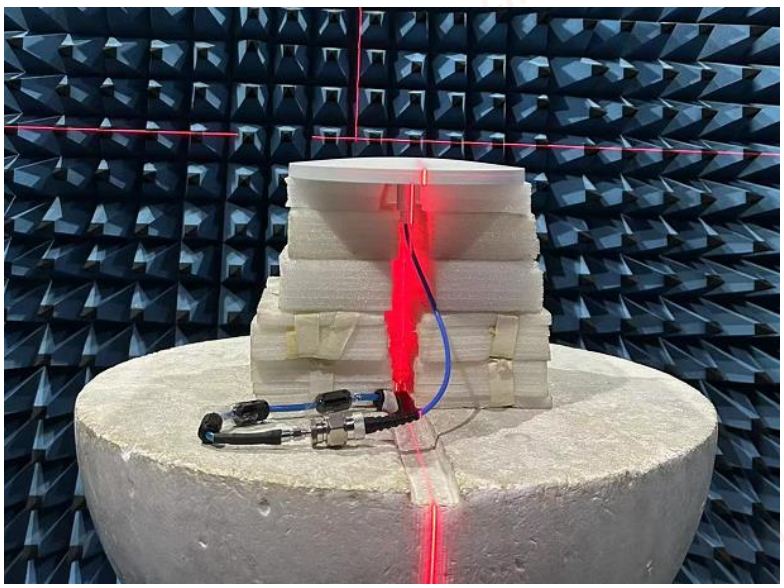

Radiation Pattern – Vertical and Horizontal Plane

chanhvinh.com

Vertical

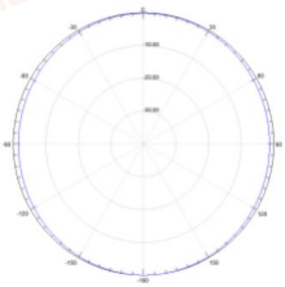

900MHz

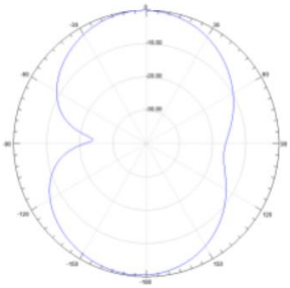

1710MHz

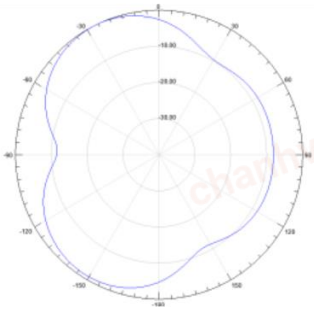

2200MHz

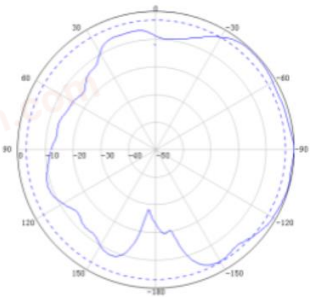

3500MHz

Horizontal

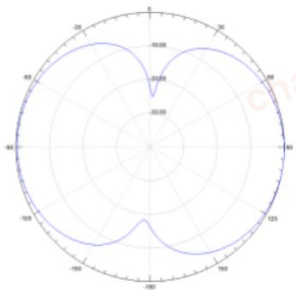

900MHz

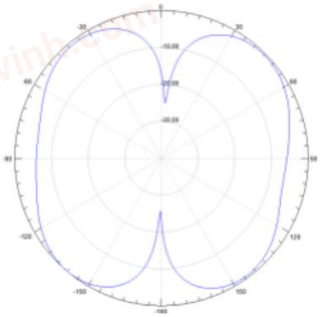

1710MHz

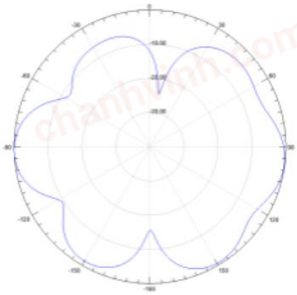

2200MHz

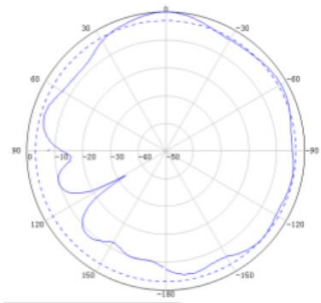

3500MHz

chanhvinh.com

Omni DAS Series
Flat Omni SISO 5G Antenna

Part number: OD617-6000S143

PACKAGING

OD617-6000S143

1.Inner box: 225*220*90mm;

2.Outer box size: 485*470*465mm;

3. 20Pcs/Carton;

Installation instructions

OD617-6000S143

Method 1:

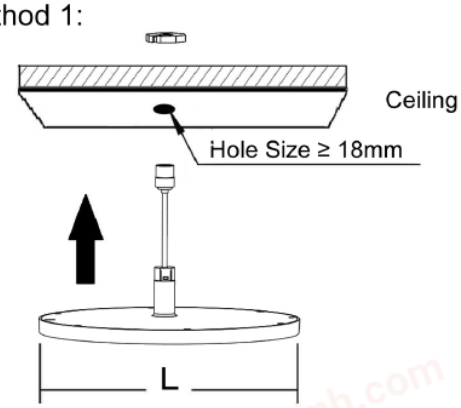

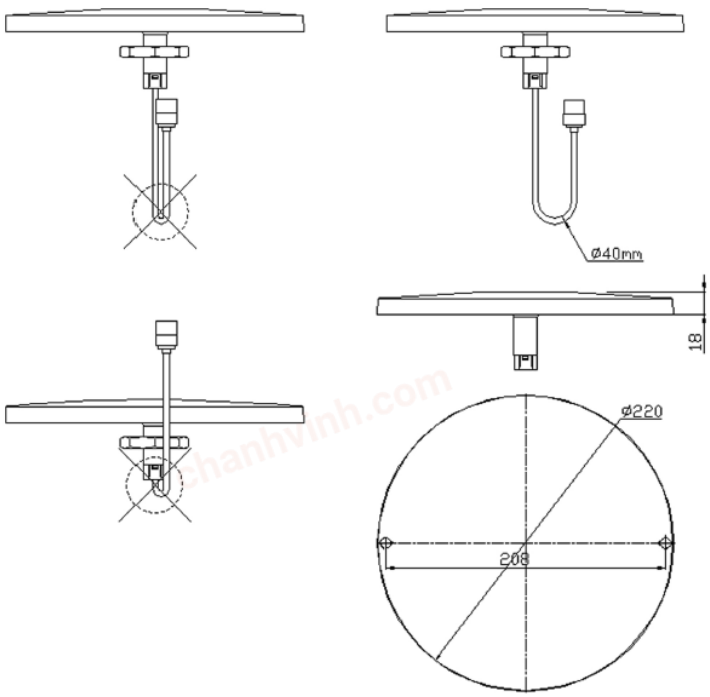

Method 2:

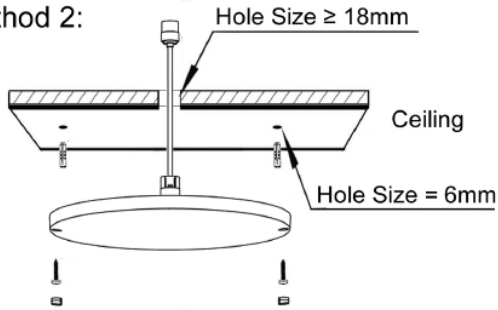

Warning: As shown,the cable can not be bent 180°, and bending dia. can not be <40mm.

Notes:

1. Please contact sales for availability, lead time, and/or any special requests. Samples available upon request.

For More Information:
Americas - antennas.us@pulseelectronics.com | Europe – antennas.eu@pulseelectronics.com | Asia – antennas.as@pulseelectronics.com | Questions? +1-800-ANTENNA
Performance warranty of products offered on this data sheet is limited to the parameters specified. Data is subject to change without notice. Other brand and product names mentioned herein may be trademarks or registered trademarks of their respective owners. © Copyright , 2020. Pulse Electronics, Inc. All rights reserved.
Company address: Pulse Electronics, a YAGEO Company, 15255 Innovation Drive, Suite #100, San Diego, CA 92128