chanhvinh.com

Omni DAS Series
Flat Omni 2x2 MIMO 5G Antenna

OD617-6000M2NF



Features & Applications:

- *4G / 5G-FR1 617-6000MHz*
- *2-port 2x2 MiM0*
- *In-building ceiling mount*
- *Horizontal omni radiation pattern*
- *Low PIM and SAR compliant*
- *Connector N-Female as standard*
- *For 4.3-10 Female version use P/N: OD617-6000M243*

ELECTRICAL SPECIFICATION

OD617-6000M2NF **Port1 & Port2**

Frequency range	MHz	617-806	806-960	1350-1550	1690-2700	3300-3800	4900-6000
Gain	dBi	1.5±0.5	2.2±0.5	3.5±0.5	4.5±1	6.0±1	6.0±1
Polarization		Linear Horizontal					
VSWR		≤1.8	≤1.8	≤1.8	≤1.8	≤1.8	≤1.8
Isolation	dB	≥16	≥18	≥18	≥20	≥30	≥30
PIM,3rd order,2x20W	dBc	≤-153					
Max. input power	W	50					
Impedance	ohm	50					
SAR compliance		Compliant based on whole-body SAR limit RF Exposure calculation (CEI EN 50383)					

MECHANICAL SPECIFICATIONS

OD617-6000M2NF

Dimension (Diameter x Height)	Housing Material	Color	Weight	Mounting Kit	
Φ266×18 mm (10.47 x 0.709 inch)	ABS, UV Protected	White RAL9003	0.5kg (1.10lbs)	Ceiling, via hole (standard)	

Wireless Technology	No. of Port	Cable Length	Cable Type	Connector Type
5G FR1	2	1Ft (0.3m)	Ø 0.160" low loss	NF

ENVIRONMENTAL SPECIFICATIONS

OD617-6000M2NF

Operating Temperature	Storage Temperature	RoHS Compliant	Ingress Protection	Warranty
-55 / +60° C	-55 / +60° C	Yes	IP50	2 years

chanhvinh.com

Mechanical Drawing

OD617-6000M2NF

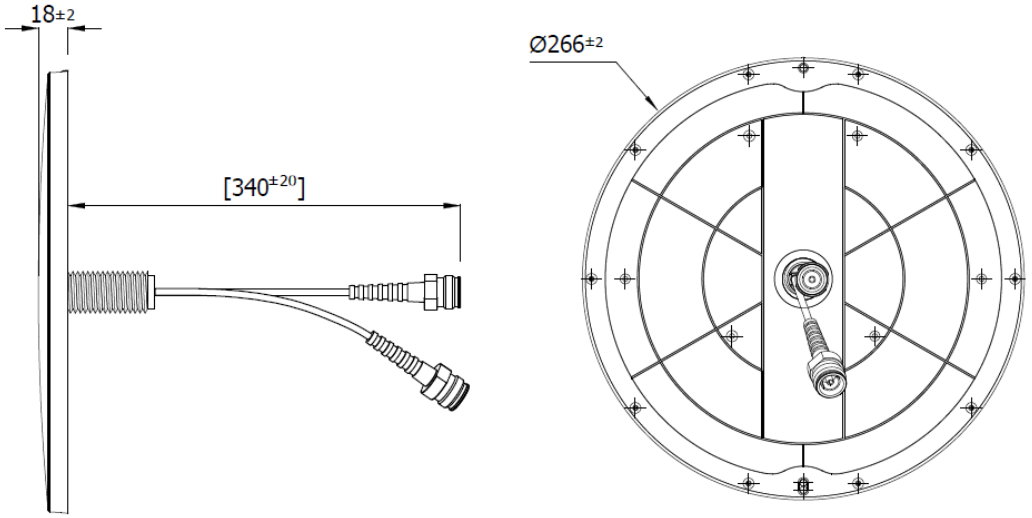

Test Setup

General / Chamber Setup

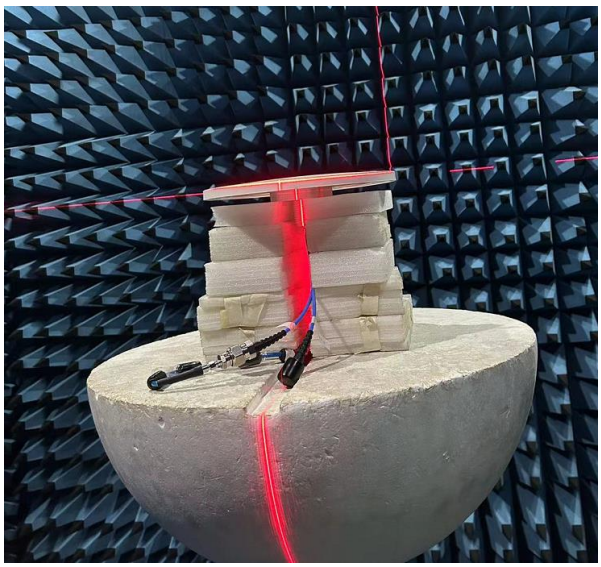

chanhvinh.com

Radiation Pattern – Vertical and Horizontal Plane

OD617-6000M2NF

Vertical Port1 & Port2

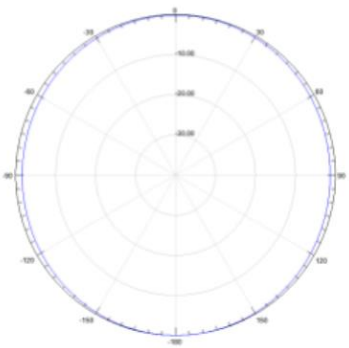

900MHz

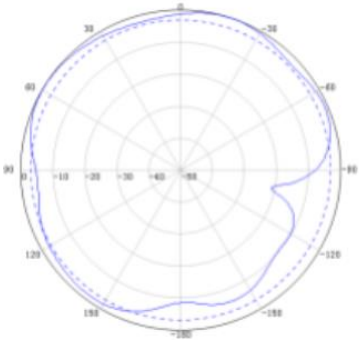

1710MHz

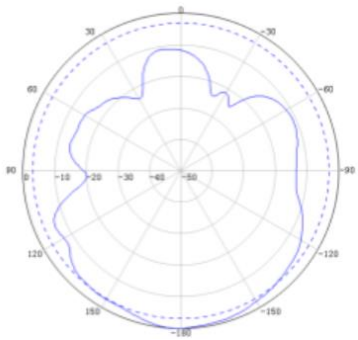

2500MHz

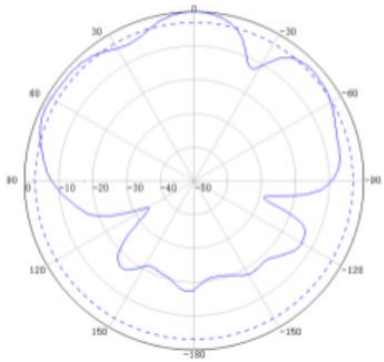

3500MHz

Horizontal Port1 & Port2

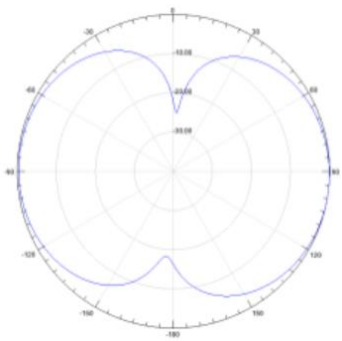

900MHz

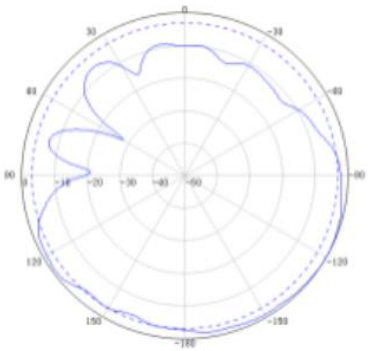

1710MHz

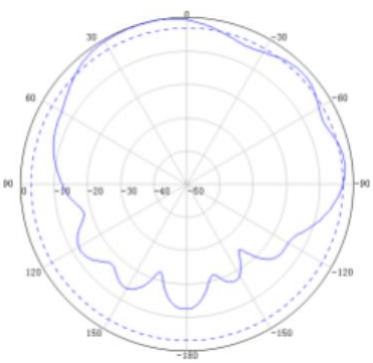

2500MHz

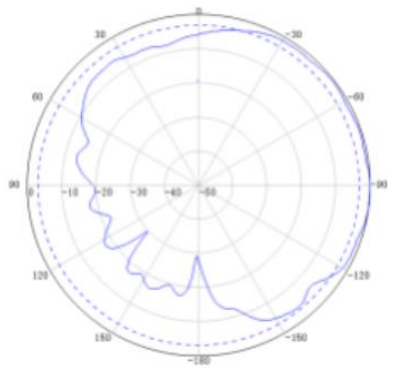

3500MHz

chanhvinh.com

PACKAGING

OD617-6000M2NF

1.Inner box: 280*275*100mm;

2.Outer box size: 580*575*535mm;

3. 20Pcs/Carton;

Installation instructions

OD617-6000M2NF

Method 1:

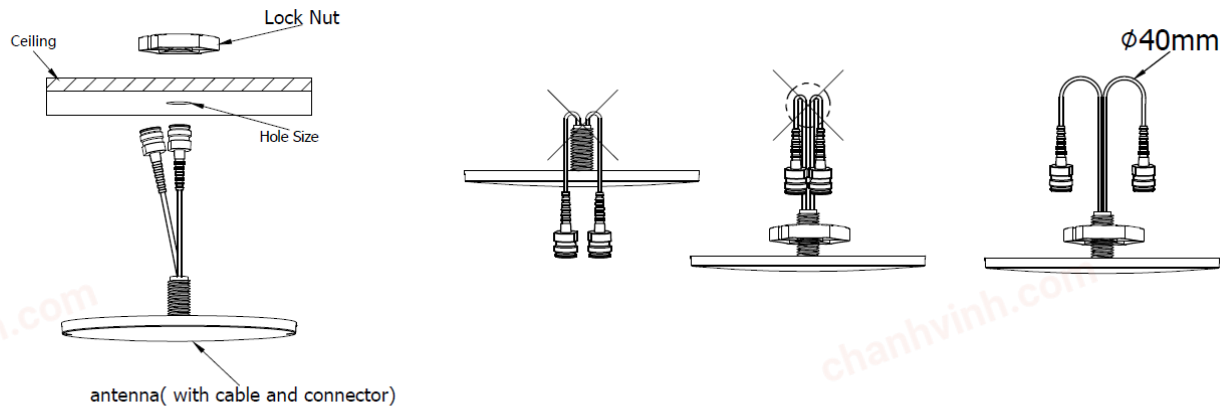

Method 2:

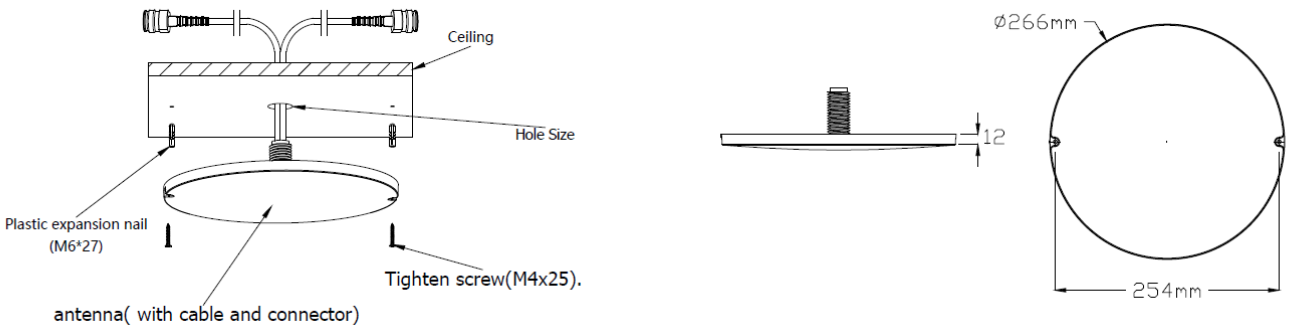

Recommended Hole Size
≥Ø26 - N-Type
≥Ø26 - Mini DIN(4.1/9.5)
≥Ø32 - 7/16

Notes:

1. Please contact sales for availability, lead time, and/or any special requests. Samples available upon request.

For More Information:
Americas - antennas.us@pulseelectronics.com | Europe – antennas.eu@pulseelectronics.com | Asia – antennas.as@pulseelectronics.com | Questions? +1-800-ANTENNA
Performance warranty of products offered on this data sheet is limited to the parameters specified. Data is subject to change without notice. Other brand and product names mentioned herein may be trademarks or registered trademarks of their respective owners. © Copyright , 2020. Pulse Electronics, Inc. All rights reserved.
Company address: Pulse Electronics, a YAGEO Company, 15255 Innovation Drive, Suite #100, San Diego, CA 92128

'YAGEO Corporation and its affiliates do not recommend the use of commercial, automotive, and/or COTS grade products for high reliability applications or manned space flight.'