chanhvinh.com

# Omni DAS Series
# Flat Omni SISO 5G+TETRA Antenna

*OD350-6000S1NF*



## *Features & Applications:*

- *4G / 5G-FR1 600-6000MHz*
- *Includes public safety, PMR, TETRA band 350-520MHz*
- *In-building ceiling mount*
- *Horizontal omni radiation pattern*
- *Low PIM and SAR compliant*
- *Connector N-Female as standard*
- *For 4.3-10 Female version use P/N: OD350-6000S143*
- *Hard ceiling mount kit available on separate request*

## ELECTRICAL SPECIFICATIONS

**OD350-6000S1NF**

| | | | | | | | | |
|---|---|---|---|---|---|---|---|---|
| Frequency range | | MHz | 350-520 | 600-960 | 1350-1550 | 1690-2700 | 3300-4200 | 4900-6000 |
| Gain | | dBi | 3.0±1 | 3.0±1 | 4.0±1 | 4.0±1 | 5.0±1 | 5.0±1 |
| Polarization | | | Horizontal | | | | | |
| Beam width | Horizontal | deg | 360 | | | | | |
| | Vertical | | 130 | 90 | 70 | 60 | 55 | 30 |
| VSWR | | | ≤2 | | ≤1.8 | | | |
| PIM,3rd order,2x20W | | dBc | -150 | | | | | |
| Max. input power | | W | 50 | | | | | |
| Impedance | | Ohm | 50 | | | | | |
| SAR compliance | | | Compliant based on whole-body SAR limit RF Exposure calculation (CEI EN 50383) | | | | | |

## MECHANICAL SPECIFICATIONS

**OD350-6000S1NF**

| Dimension (Diameter x Height) | Housing Material | Color | Weight | Mounting Kit | |
|---|---|---|---|---|---|
| Φ290×10 mm (11.42 x 0.394 inch) | PC/ABS, UV Protected | White | 0.47Kg (1.034lbs) | Ceiling, via hole (standard) | |

| Wireless Technology | No. of Port | Cable Length | Cable Type | Connector Type |
|---|---|---|---|---|
| 5G FR1, TETRA | 1 | 1Ft (0.3m) | Ø 0.160" low loss | NF |
| | | | | |

## ENVIRONMENTAL SPECIFICATIONS

**OD350-6000S1NF**

| Operating Temperature | Storage Temperature | RoHS Compliant | Ingress Protection | Warranty |
|---|---|---|---|---|
| -55 / +60° C | -55 / +60° C | Yes | IP50 | 2 years |

chanhvinh.com



## Mechanical Drawing

**OD350-6000S1NF**

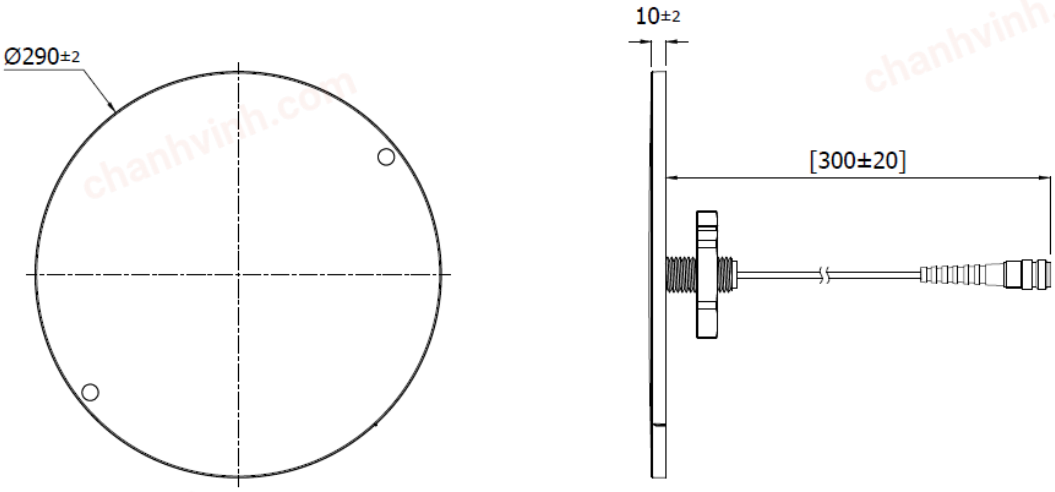


## Test Setup

General / Chamber Setup

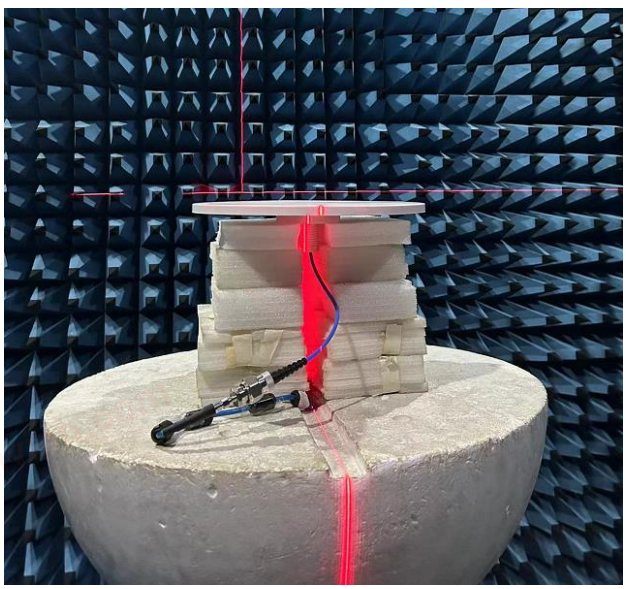

chanhvinh.com



Radiation Pattern –Vertical and Horizontal Plane

**OD350-6000S1NF**

### Vertical

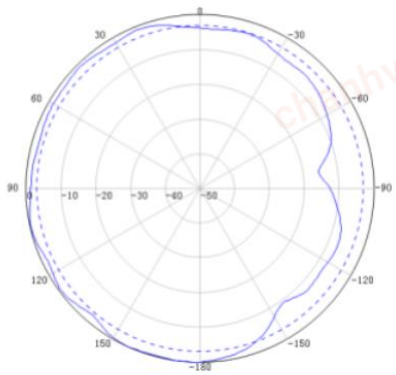

800MHz

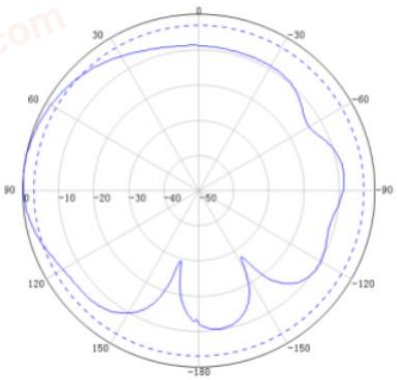

2170MHz

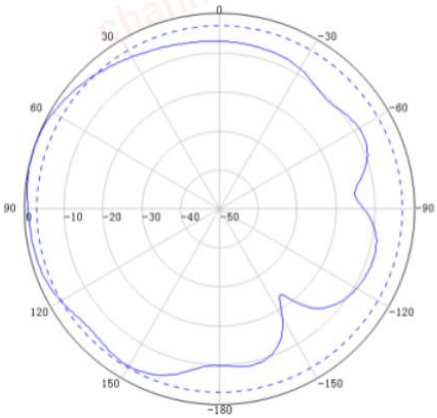

2500MHz

### Horizontal

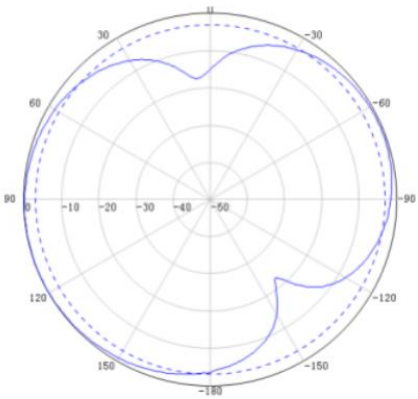

800MHz

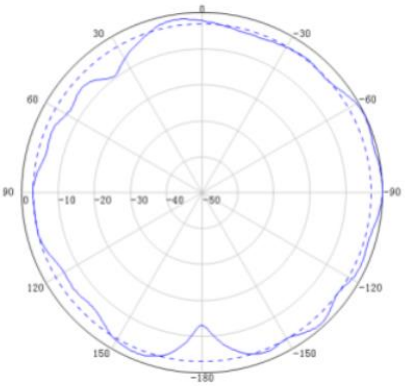

2170MHz

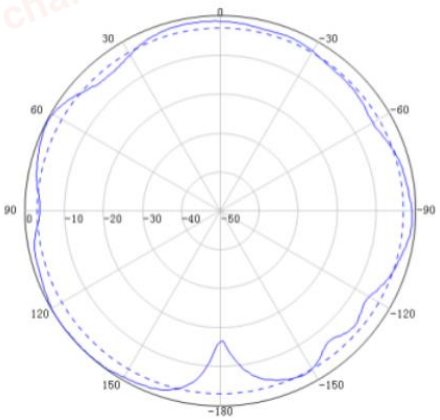

2500MHz

chanhvinh.com



## PACKAGING

**OD350-6000S1NF**

1.Inner box: 830*310*310mm;

2.Outer box size: 645*460*460mm;

3. 20Pcs/Carton;

## Installation instructions

**OD350-6000S1NF**

**Method 1:**

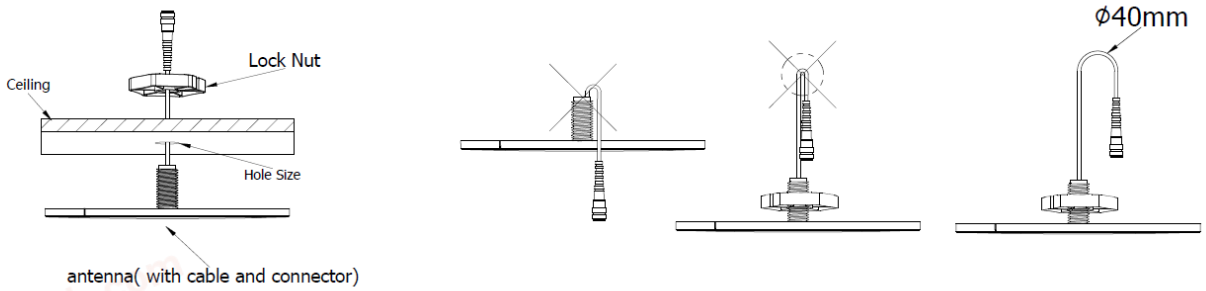


**Method 2:**

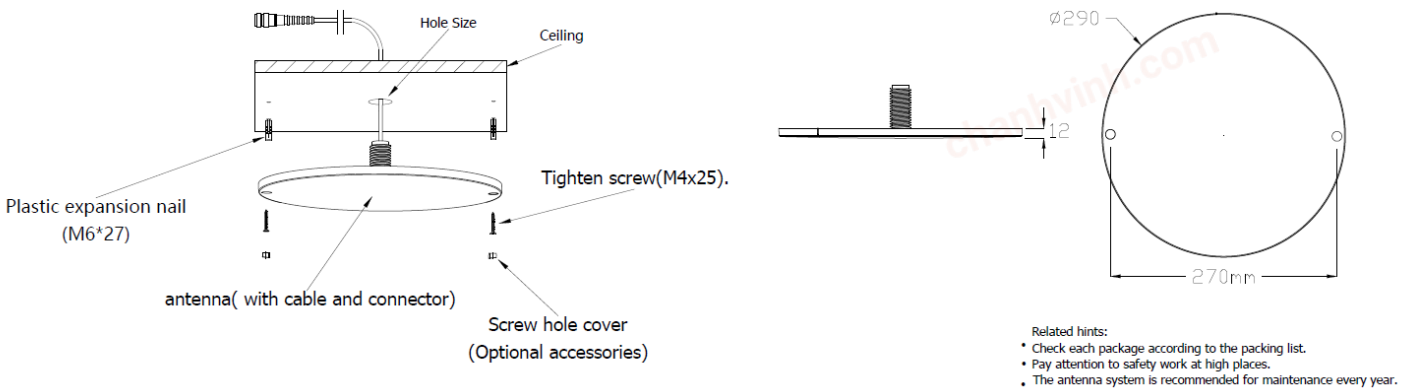


Related hints:
- Check each package according to the packing list.
- Pay attention to safety work at high places.
- The antenna system is recommended for maintenance every year.

Recommended Hole Size
≥Ø26 - N-Type
≥Ø26 - Mini DIN(4.1/9.5)
≥Ø32 - 7/16

Notes:
1. Please contact sales for availability, lead time, and/or any special requests. Samples available upon request.

For More Information:
Americas - antennas.us@pulseelectronics.com | Europe – antennas.eu@pulseelectronics.com | Asia – antennas.as@pulseelectronics.com | Questions? +1-800-ANTENNA
Performance warranty of products offered on this data sheet is limited to the parameters specified. Data is subject to change without notice. Other brand and product names mentioned herein may be trademarks or registered trademarks of their respective owners. © Copyright , 2020. Pulse Electronics, Inc. All rights reserved.
Company address: Pulse Electronics, a YAGEO Company, 15255 Innovation Drive, Suite #100, San Diego, CA 92128