chanhvinh.com

PulseJack™ 1X1 Tab-Down, Low profile Industrial ICM for PCI Expresss

Designed to Support 10GBASE-T Transceivers

Pulse
a YAGEO company



Features and Benefits:

- *Compliant with IEEE 802.3 standard*
- *Ruggedised for -40 to +85°C Industrial and Outdoor use*
- *RoHS peak wave solder temperature rating 260°C*
- *Low profile package for PCI Express*
- *Fine-tune magnetics to specific PHY vendors*
- *RoHS compliant and Halogen Free*

Electrical Specifications @ 25°C - Operating Temperature -40°C to +85°C

Part Number	Channel Option	LEDs[2] (L/R)	Insertion Loss (dB MAX)		Return Loss (dB MIN)				Common to Differential Mode Rejection (dB MIN)		Cross Talk (dB or better)		Hipot (V_{DC} MIN)
			100 KHz	1-400 MHz	1-100 MHz	200 MHz	300 MHz	500 MHz	1-300 MHz	300-500 MHz	1-100 MHz	100-500 MHz	
JXT4-1128HL**	5**	G-Y/G	-3.0	-5.0	-22.0	-16.5	-13.2	-9	-30	-22	-28	-19	2250
JXT4-1141HL^	4	G-Y/G	-3.0	-5.0	-22.0	-16.5	-13.2	-9	-30	-22	-28	-19	2250
JXT4-1198HL*	5	G-Y/G	-3.0	-5.0	-22.0	-16.5	-13,2	-9	-30	-22	-28	-19	2250

Notes:
1. LEDs: (Left/Right) G = green, Y = yellow
2. PHY Vendors Approval - *INTEL, ^BROADCOM, **MARVELL (4 + Capacitive 5th Channel)
3. Storage Temperature - 50 to 125°C

RJ45 Durability Testing Rating

Part Number	Mating Force (MAX)	Unmating Force (MAX)	Durability	Plug to Jack Retention (MIN)
JXT4 Series	5 lbs./2.268 kgs.	5 lbs./2.268 kgs.	750 Insertions	20lbs./9.072 kgs.

RJ45 Material Specification

Part Number	Shield		Contact			Housing		MSL[2] Rating
	Material	Finish	Material	Plating Area	Solder Area	Material	Specification	
JXT4 Series	Brass	50-200µ inches thick nickel over brass	Phosphor Bronze	50µ inches gold over 30-50µ inches nickel	200-500µ inches tin over 50-100µ inches nickel	Thermoplastic	UL 94 V-0	1

Notes:
1. Connector dimensions comply with FCC dimension requirements
2. MSL - Moisture Sensitivity Level
3. All parts are tin matte finish over nickel.
4. Solderability to ANSI/J-STD-001, IPC/EIA J-STD-003A

chanhvinh.com

PulseJack™ 1X1 Tab-Down, Low profile Industrial ICM for PCI Expresss

Designed to Support 10GBASE-T Transceivers

Pulse a YAGEO company

Mechanicals

JXT4-1128HL, JXT4-1141HL, JXT4-1198HL

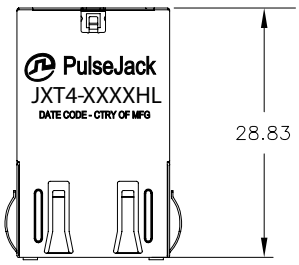

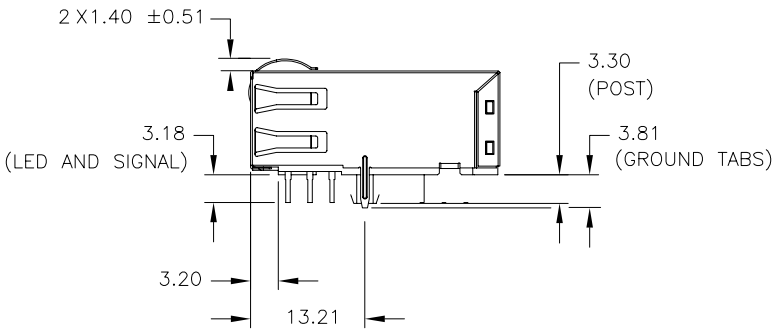

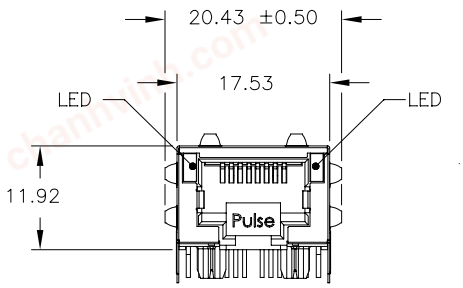

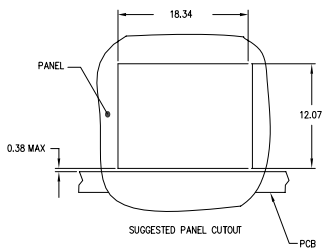

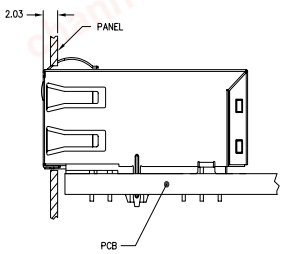

PCB LAYOUTS

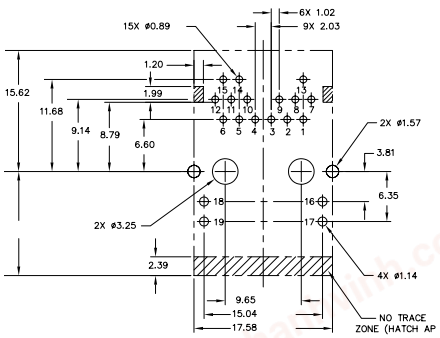

JXT4-1128HL

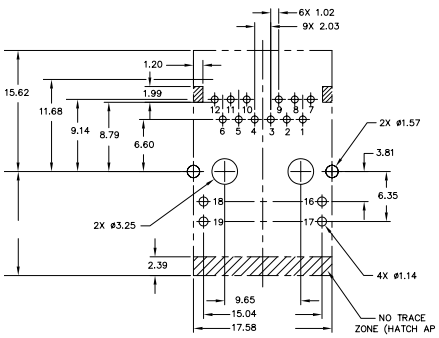

JXT4-1141HL

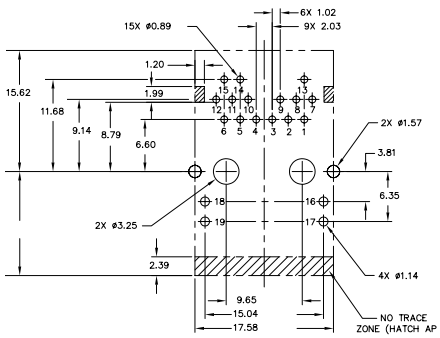

JXT4-1128HL

ALL DIMENSIONS ARE IN MILLIMETERS - THE FOLLOWING TOLERANCES APPLY: x.xx = ±.008mm

chanhvinh.com

PulseJack™ 1X1 Tab-Down, Low profile Industrial ICM for PCI Expresss

Designed to Support 10GBASE-T Transceivers

SCHEMATICS

JXT4-1128HL

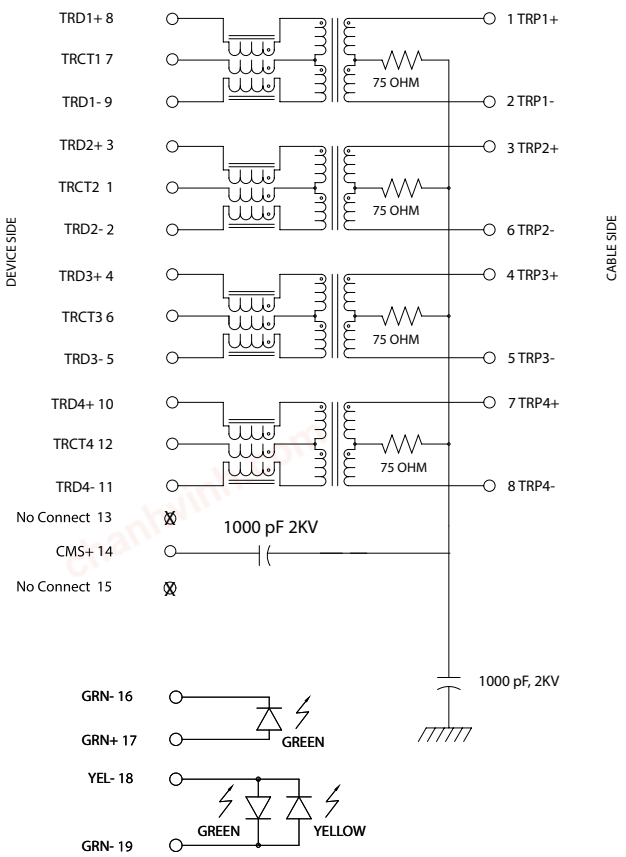

JXT4-1141HL

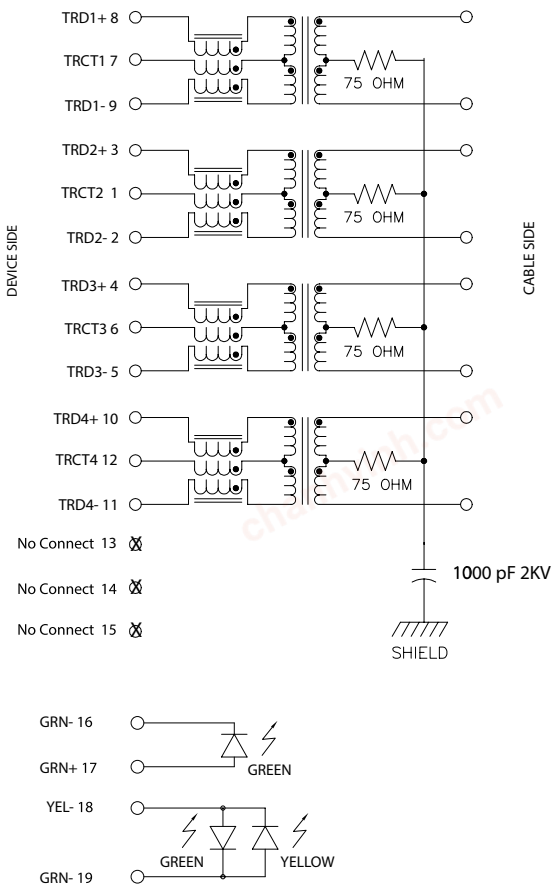

Pulse a YAGEO company

chanhvinh.com

PulseJack™ 1X1 Tab-Down, Low profile Industrial ICM for PCI Expresss

Designed to Support 10GBASE-T Transceivers

SCHEMATIC

JXT4-1198HL

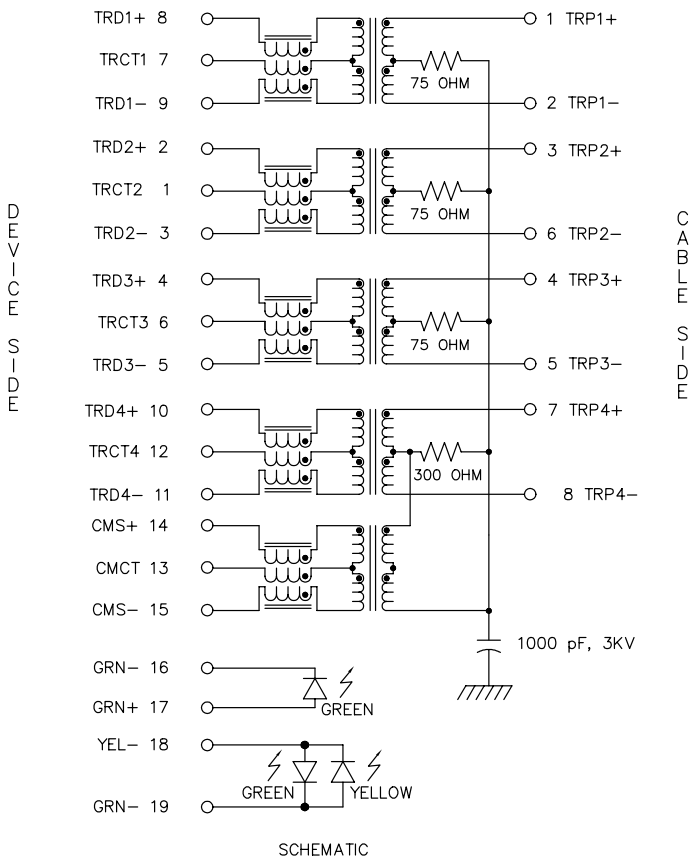

SCHEMATIC

LED SPECIFICATIONS

EMMITTED COLOR	GREEN	YELLOW	GREEN
WAVELENGTH (nM)	565	588	565
POWER DISSIPATION (Pd)	105 mW MAX	100 mW MAX	105 mW MAX
DC FORWARD CURRENT	25 mA MAX	30 mA MAX	25 mA MAX
FORWARD VOLTAGE (VF) @20mA	2.2 V TYP	2.1 V TYP	2.2 V TYP
	BICOLOR		

NOTE: PER VENDOR'S SPECIFICATION

For More Information:

Americas - prodinfo_network_americas@yageo.com | **Europe -** prodinfo_network_emea@yageo.com | **Asia -** prodinfo_network_asia@yageo.com

Performance warranty of products offered on this data sheet is limited to the parameters specified. Data is subject to change without notice. Other brand and product names mentioned herein may be trademarks or registered trademarks of their respective owners. © Copyright, 2023. Pulse Electronics, Inc. All rights reserved.