chanhvinh.com

Industrial Gigabit PulseJack™ Integrated RJ45 Connectors

Rugged, latch-Up, Pin-in-Paste Series with designs for 90W PoE over industrial temperature range



Features and Benefits:

- *Side entry, small footprint to minimize board space*
- *UL62368-1 compliance file No. E216117*
- *Meets IEEE 802.3 specification for 1G, 2.5G and 5G*
- *Industrial operating temperature -40 to +85oC*
- *Options to support Power over Ethernet*
- *Through-hole Reflow (THR) compatible processing*

Electrical Specifications @ 25°C - Operating Temperature -40°C to 85°C

Part Number	Data Rate	LED Coiour (L/R)	Supported PoE Current	EMI Choke Fitted	EMI Fingers	Isolation* (Pri:Sec)
JXF0-1010NL	1000Base-T	None	No	2W Signal Line	Top & Sides	2250VDC / 60sec
JXF0-1011NL	1000Base-T	Green-Yellow / Green-Yellow	No	2W Signal Line	Top & Sides	2250VDC / 60sec
JXF0-1012NL	1000Base-T	Green-Yellow / Green-Yellow	900mA - 90W 4 Pair	3W, PHY side	Top & Sides	2250VDC / 60sec
JXF0-2510NL	2.5GBase-T	None	No	2W Signal Line	Top & Sides	2250VDC / 60sec
JXF0-2511NL	2.5GBase-T	Green-Yellow / Green-Yellow	No	2W Signal Line	Top & Sides	2250VDC / 60sec
JXF0-2512NL	2.5GBase-T	Green-Yellow / Green-Yellow	900mA - 90W 4 Pair	3W, PHY side	Top & Sides	2250VDC / 60sec
JXF0-5010NL	5GBase-T	None	No	2W Signal Line	Top & Sides	2250VDC / 60sec
JXF0-5011NL	5GBase-T	Green-Yellow / Green-Yellow	No	2W Signal Line	Top & Sides	2250VDC / 60sec
JXF0-5012NL	5GBase-T	Green-Yellow / Green-Yellow	900mA - 90W 4 Pair	3W, PHY side	Top & Sides	2250VDC / 60sec

* Isolation is across the Transformer only whne the design supports Power over Ethernet (PoE).

Electrical Specifications @ 25°C - Operating Temperature -40°C to 85°C

Part Number	Inductance (min) Media Side	Insertion Loss (Max)	Return Loss* (dB MIN)			Cross Talk (dB TYP)		Common Mode Rejection (dB MIN)	
	100KHz, 0.1mA	1-125/250MHz	1-40MHz	40-100MHz	100-250MHz*	10-125MHz	125-250MHz	10-125MHz	125-250/400 MHz
JXF0-1010NL	350mH	-1.5dB	-16dB	-9dB	-	-24dB	-	-24dB	-
JXF0-1011NL	350mH	-1.5dB	-16dB	-9dB	-	-24dB	-	-24dB	-
JXF0-1012NL	350mH	-1.0dB	-16dB	-9dB	-	-24dB	-	-24dB	-
JXF0-2510NL	180mH	-1.0dB	-20dB	-14dB	-10dB	-30dB	-	-35dB	-30dB
JXF0-2511NL	180mH	-1.0dB	-20dB	-14dB	-10dB	-30dB	-	-35dB	-30dB
JXF0-2512NL	180mH	-1.0dB	-20dB	-14dB	-10dB	-30dB	-	-35dB	-30dB
JXF0-5010NL	180mH	-1.0/-1.5dB	-24dB	-19dB	-14dB	-30dB	-20dB	-35dB	-30/-25dB
JXF0-5011NL	180mH	-1.0/-1.5dB	-24dB	-19dB	-14dB	-30dB	-20dB	-35dB	-30/-25dB
JXF0-5012NL	180mH	-1.0/-1.5dB	-24dB	-19dB	-14dB	-30dB	-20dB	-35dB	-30/-25dB

* Return Loss is interpolated using formula: -20+[15 x LOG10 (f/40MHz)] for 2.5GBase-T, and -20+[12.5 x LOG10 (f/40MHz)] for 5GBase-T .

Notes:

1. ROHS Compliant:
2. Plastic housing: thermoplastic material with flammability rating UL 94V-0 or better
3. Contacts plating: 30 micro-inch gold plating
4. Contacts base material: Phosphor bronze
5. Under plating: 30 micro-inch min nickel
6. Solder Tail Plating: 100 micro-inch (min), inches 100% tin, matte finish
7. Metal shield nickel plating on Copper Alloy
8. Jack cavity conforms to FCC part 68 subpart
9. PCB plating: HASL
10. Storage temperature: -40°C to +85°C
11. Compliance to J-STD:
    A. J-STD-002: solderabilitiy at 245°C DIP and LOOK test
    B. J-STD-020: level 1, no moisture sensitive
    C. J-STD-075: R7, 260°C maximum through Wave Solder
12. Parts come in full Trays of 50pcs

Industrial Gigabit PulseJack™ Integrated RJ45 Connectors

Rugged, latch-Up, Pin-in-Paste Series with designs for 90W PoE over industrial temperature range

Mechanicals

JXFO-xx10NL

Design with EMI Fingers and no LEDs

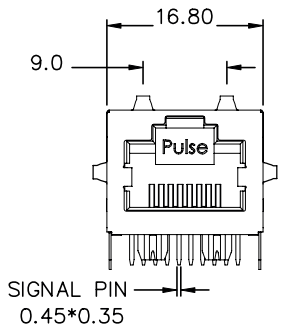

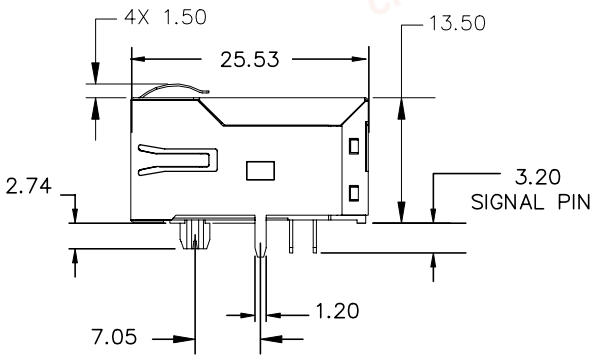

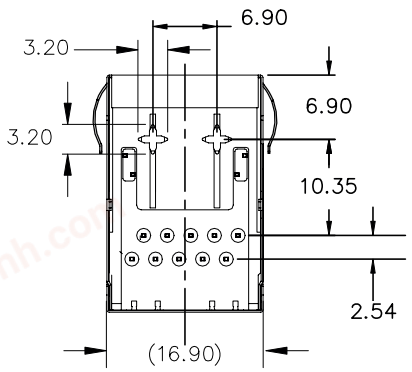

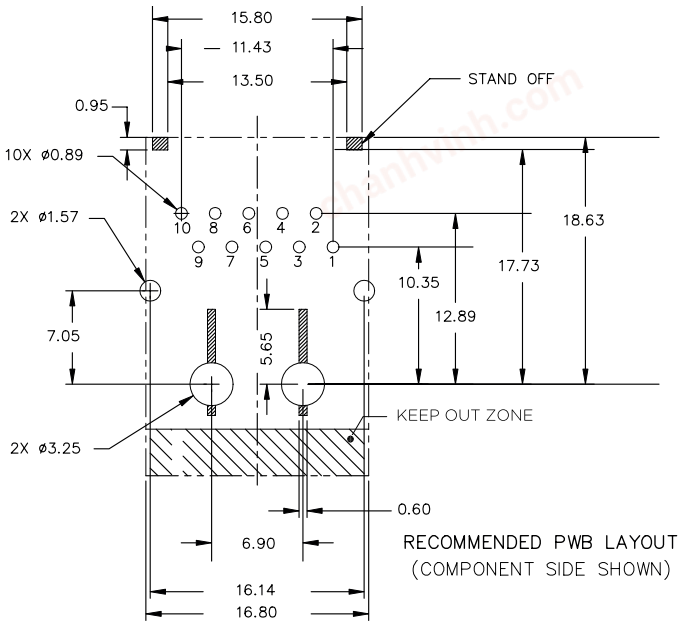

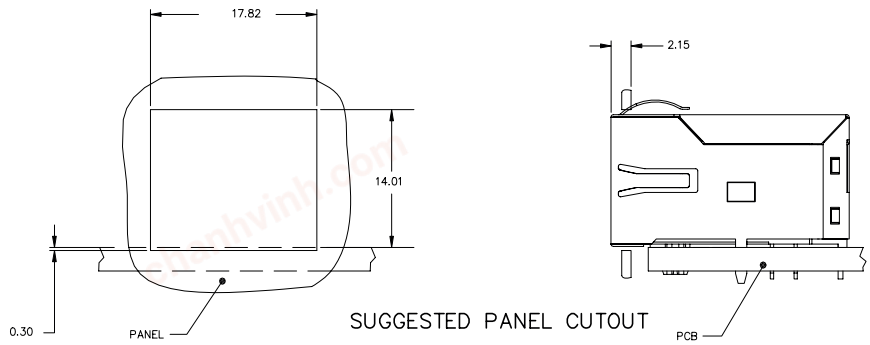

chanhvinh.com

Mechanicals

JXFO-xx11NL

Design with EMI Fingers and LEDs

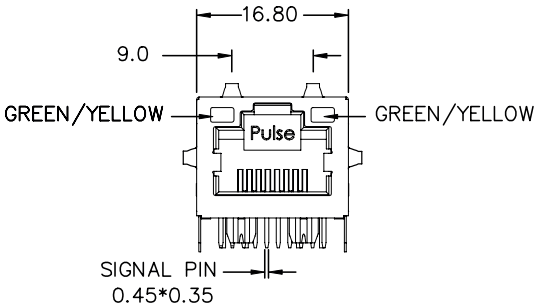

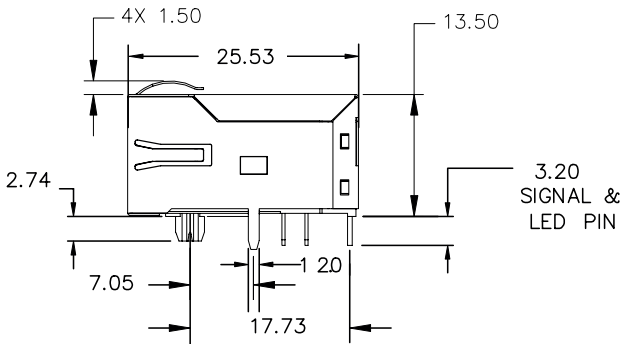

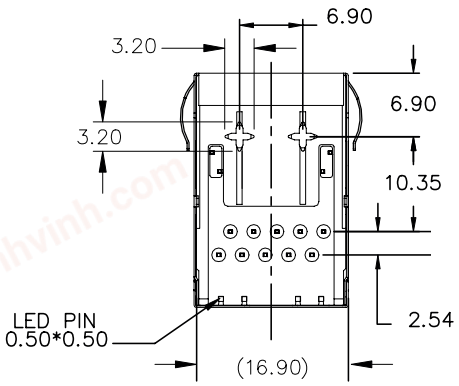

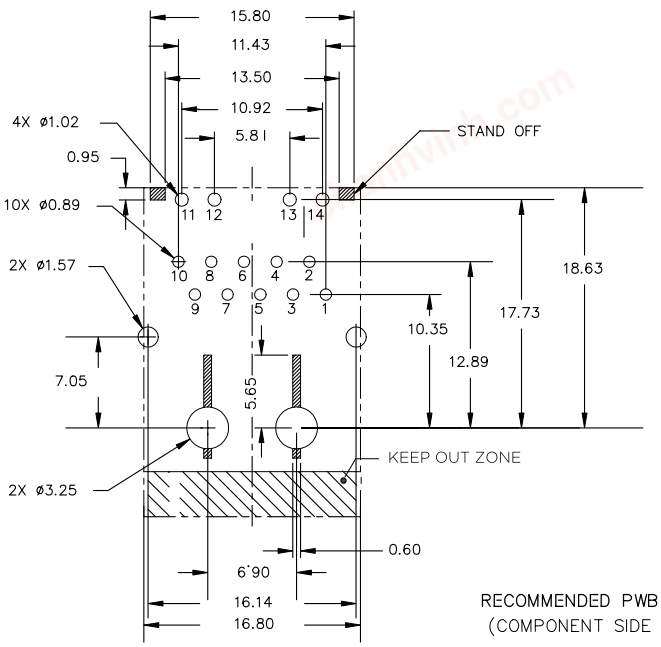

RECOMMENDED PWB LAYOUT
(COMPONENT SIDE SHOWN)

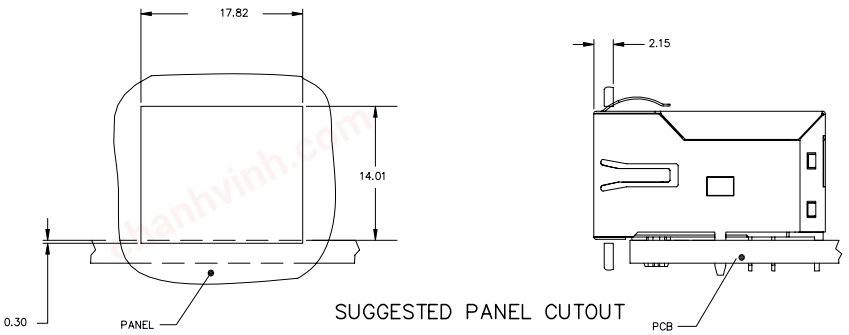

SUGGESTED PANEL CUTOUT

Industrial Gigabit PulseJack™ Integrated RJ45 Connectors

Rugged, latch-Up, Pin-in-Paste Series with designs for 90W PoE over industrial temperature range

Mechanicals

JXFO-xx12NL

Design with EMI Fingers, 90W PoE and LEDs

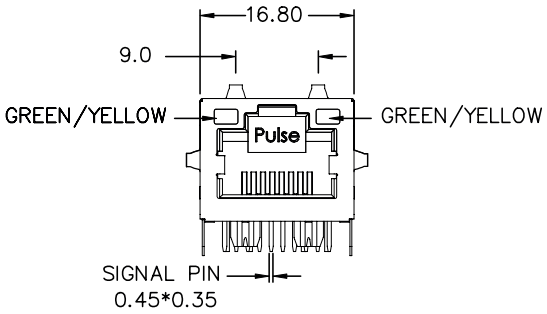

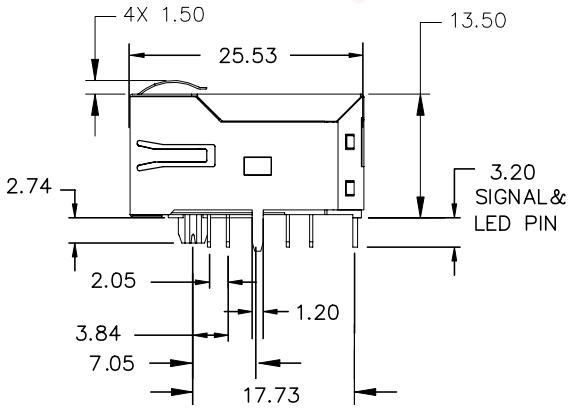

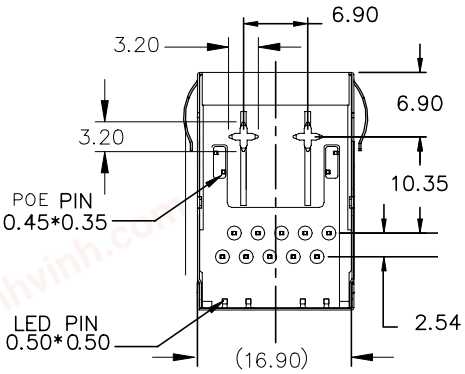

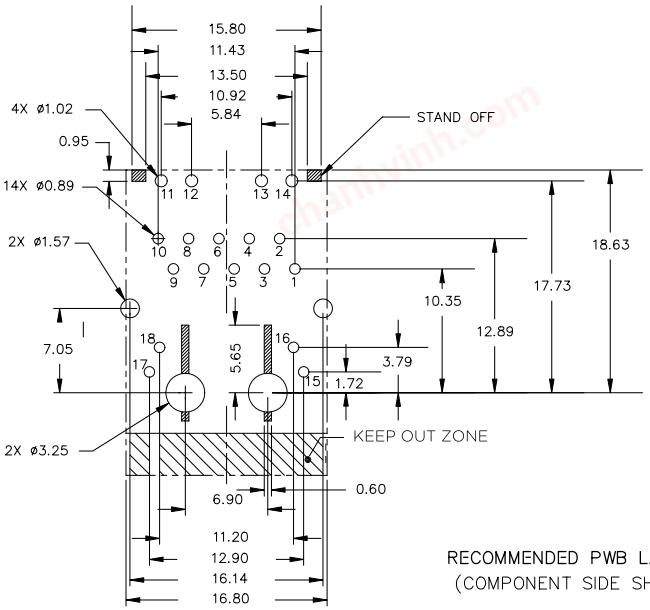

RECOMMENDED PWB LAYOUT
(COMPONENT SIDE SHOWN)

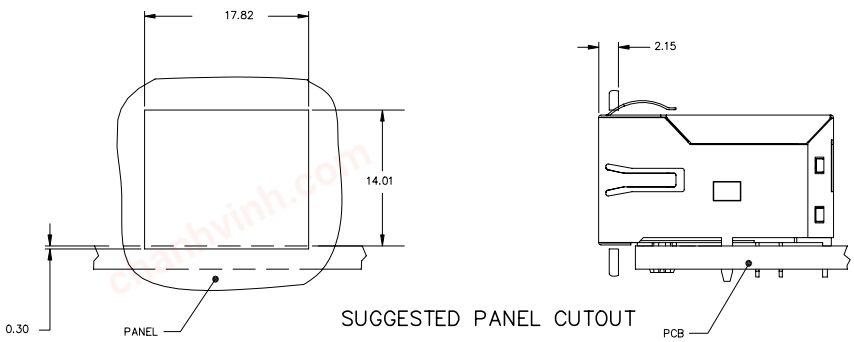

SUGGESTED PANEL CUTOUT

Industrial Gigabit PulseJack™ Integrated RJ45 Connectors

Rugged, latch-Up, Pin-in-Paste Series with designs for 90W PoE over industrial temperature range

SCHEMATICS

JXF0-1010NL, JXF0-2510NL, JXF0-5010NL (without LEDs)

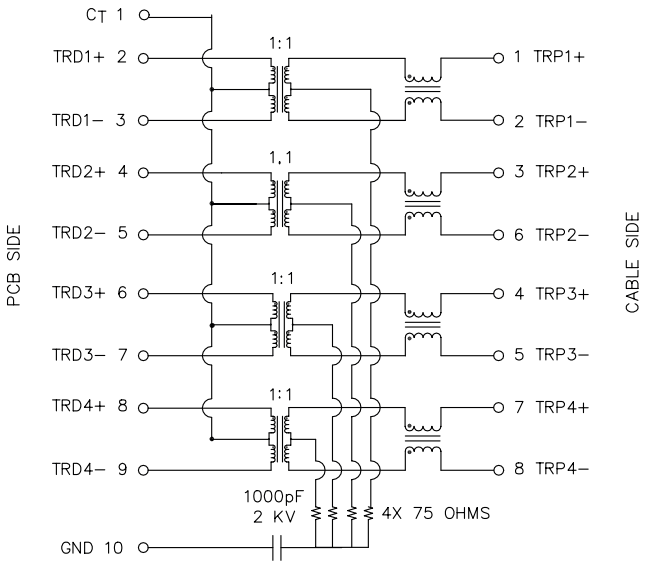

JXF0-1011NL, JXF0-2511NL, JXF0-5011NL (with LEDs)

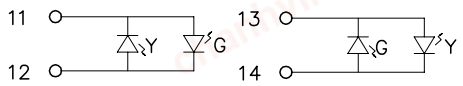

BI-COLOUR LED SPECIFICATION

EMMITTED COLOR	GREEN	YELLOW
WAVELENGTH (nm)	568 nM	585 nM
BRIGTHNESS (mCD)	8 TO 12 TYP. @ 20mA	8 TO 12 TYP. @ 20mA
VIEWING ANGLE	100°	100°
POWER DISSIPATION (Pd)	100 mW MAX	100 mW MAX
DC FORWARD CURRENT	150 mA MAX	150 mA MAX
REVERSE VOLTAGE (Vr)	5.0 V MAX	5.0 V MAX

JXF0-1012NL, JXF0-2512NL, JXF0-5012NL

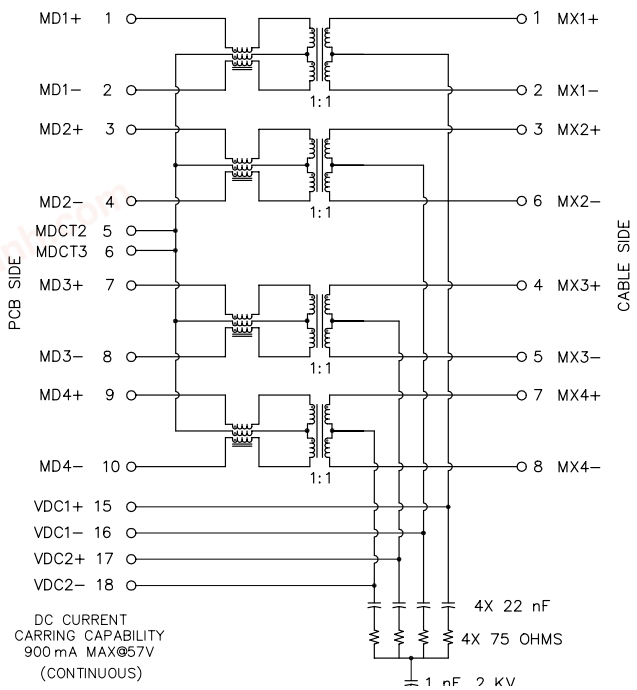

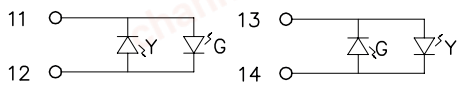

BI-COLOUR LED SPECIFICATION

EMMITTED COLOR	GREEN	YELLOW
WAVELENGTH (nm)	568 nM	585 nM
BRIGTHNESS (mCD)	8 TO 12 TYP. @ 20mA	8 TO 12 TYP. @ 20mA
VIEWING ANGLE	100°	100°
POWER DISSIPATION (Pd)	100 mW MAX	100 mW MAX
DC FORWARD CURRENT	150 mA MAX	150 mA MAX
REVERSE VOLTAGE (Vr)	5.0 V MAX	5.0 V MAX

For More Information:

Americas - prodinfo_network_americas@yageo.com | **Europe -** prodinfo_network_emea@yageo.com | **Asia -** prodinfo_network_asia@yageo.com

Performance warranty of products offered on this data sheet is limited to the parameters specified. Data is subject to change without notice. Other brand and product names mentioned herein may be trademarks or registered trademarks of their respective owners. © Copyright, 2025. Pulse Electronics, Inc. All rights reserved.

YAGEO Corporation and its affiliates do not recommend the use of commercial or automotive grade products for high reliability applications or manned space flight.