chanhvinh.com

Pin-in-Paste PulseJack™ Integrated Connector modules for Industrial Ethernet

Reflow compatible designs for fast Ethernet and 1Gigabit connectivity

YAGEO GROUP PULSE



Features and Benefits:

- Complete THR Connector and magnetics in one package
- IEEE802.3 compliant with 350uH at 8mA DC bias for 10/100Base-Tx and 1000Base-T
- Compatible with market leading Ethernet PHYs
- Rugged design for outdoor and industrial use
- Fully RoHS and Lead Free compliant
- IR Reflow and Wave solder compatible

Electrical Specifications @ 25°C - Operating Temperature -40°C to +85°C

Part Number	Data Rate	Style	LED Configuration (L/R)	EMI Fingers Configuration	Design Style	Isolation (Pri:Sec)	THR replacement to Standard THD Product
JXD0-9006NL	100Base-TX	Latch-Down	Green/Yellow	YES	AutoMDIX	2250VDC / 60sec	JXD0-0006NL
JXD0-9007NL	100Base-TX	Latch-Down	Green/Yellow	None	AutoMDIX	2250VDC / 60sec	None
JXD0-9010NL	1000Base-T	Latch -Down	Green-Yellow / Green-Yellow	YES	Matches Idr PHY	2250VDC / 60sec	None
JXD0-9011NL	1000Base-T	Latch-Down	Green-Yellow / Green-Yellow	None	Matches Idr PHY	2250VDC / 60sec	JXD0-0001NL
JXD0-9015NL	1000Base-T	Latch-Down	Green/Yellow	YES	Matches Vdr PHY	2250VDC / 60sec	JXD0-0015NL
JXD0-9019NL	1000Base-T	Latch-Down	Green/Yellow	None	Matches Vdr PHY	2250VDC / 60sec	JXD0-0019NL
JXD1-9008NL	100Base-TX	Latch -Up	Green/Yellow	YES	AutoMDIX	2250VDC / 60sec	JXD0-0008NL
JXD1-9007NL	100Base-TX	Latch-Up	Green/Yellow	None	AutoMDIX	2250VDC / 60sec	None
JXD1-9010NL	1000Base-T	Latch -Up	Green-Yellow / Green-Yellow	YES	Matches Idr PHY	2250VDC / 60sec	None
JXD1-9011NL	1000Base-T	Latch-Up	Green-Yellow / Green-Yellow	None	Matches Idr PHY	2250VDC / 60sec	JXD0-0001NL
JXD1-9015NL	1000Base-T	Latch-Up	Green/Yellow	YES	Matches Vdr PHY	2250VDC / 60sec	JXD0-0015NL
JXD1-9019NL	1000Base-T	Latch-Up	Green/Yellow	None	Matches Vdr PHY	2250VDC / 60sec	JXD0-0019NL

100Base-TX **Electrical Specifications @ 25°C - Operating Temperature -40°C to +85°C**

Part Number	Insertion Loss (MAX)	Return Loss (MIN)			Crosstalk (MIN)			CMRR (MIN)	DCR (J1-J2) (J3-J6)
	1 ~ 100MHz	1 ~ 30MHz	30 ~ 60MHz	60 ~ 80MHz	1MHz	30 ~ 60MHz	100MHz	1 - 100MHz	
JXD0/JXD1-900xNL	-1.2dB	-16dB	-12dB	-10dB	-35dB	-30dB	-30dB	-30dB	1.2 OHM max

1000Base-T **Electrical Specifications @ 25°C - Operating Temperature -40°C to +85°C**

Part Number	Insertion Loss (MAX)	Return Loss (MIN)			Crosstalk (MIN)			CMRR (MIN)	DCR (J1-J2), (J3-J6) (J4-J5), (J7-J8)
	1 ~ 125MHz	1 ~ 30MHz	30 ~ 80MHz	80 ~ 100MHz	1MHz	30 ~ 60MHz	100MHz	1 - 100MHz	
JXD0/JXD1-901xNL	-1.2dB	-18dB	-12dB	-10dB	-38dB	-33dB	-30dB	-30dB	1.2 OHM max

Notes:

1. ROHS Compliant:
2. Plastic housing: LCP material with flammability rating UL94V-0
3. Contacts plating: 30 micro-inch gold plating
4. Contacts base material: Phosphor bronze
5. Under plating: 50u inches min nickel
6. Solder Tail Plating: 100 min u inches 100% tin, matte finish
7. Metal shield - nickel plating on Brass
8. Jack cavity conforms to FCC part 68 subpart
9. PCB plating: HASL
10. Storage temperature: -40°c to 85°C
11. All parts are shipped in trays with 50pcs/tray - see page4 for details
12. Compliance to J-STD:
    A. J-STD-002: solderabilitiy at 245°C DIP and LOOK test
    B. J-STD-020: level 1, no moisture sensitive
    C. J-STD-075: W2, 270°C maximum through wave solder
    D. J-STD-075: R7, 245°C maximum through reflow solder process

RJ45 Connector performance:

- Insulation Resistance : 500M Ohms Min
- Insertion force with the latch depressed : 22N Max
- Removal force with the latch depressed : 44N Max
- Durability : 750 Cycles

chanhvinh.com

Pin-in-Paste PulseJack™ Integrated Connector modules for Industrial Ethernet

Reflow compatible designs for fast Ethernet and 1Gigabit connectivity

YAGEO GROUP PULSE

MECHANICALS

JXD0-90xxNL

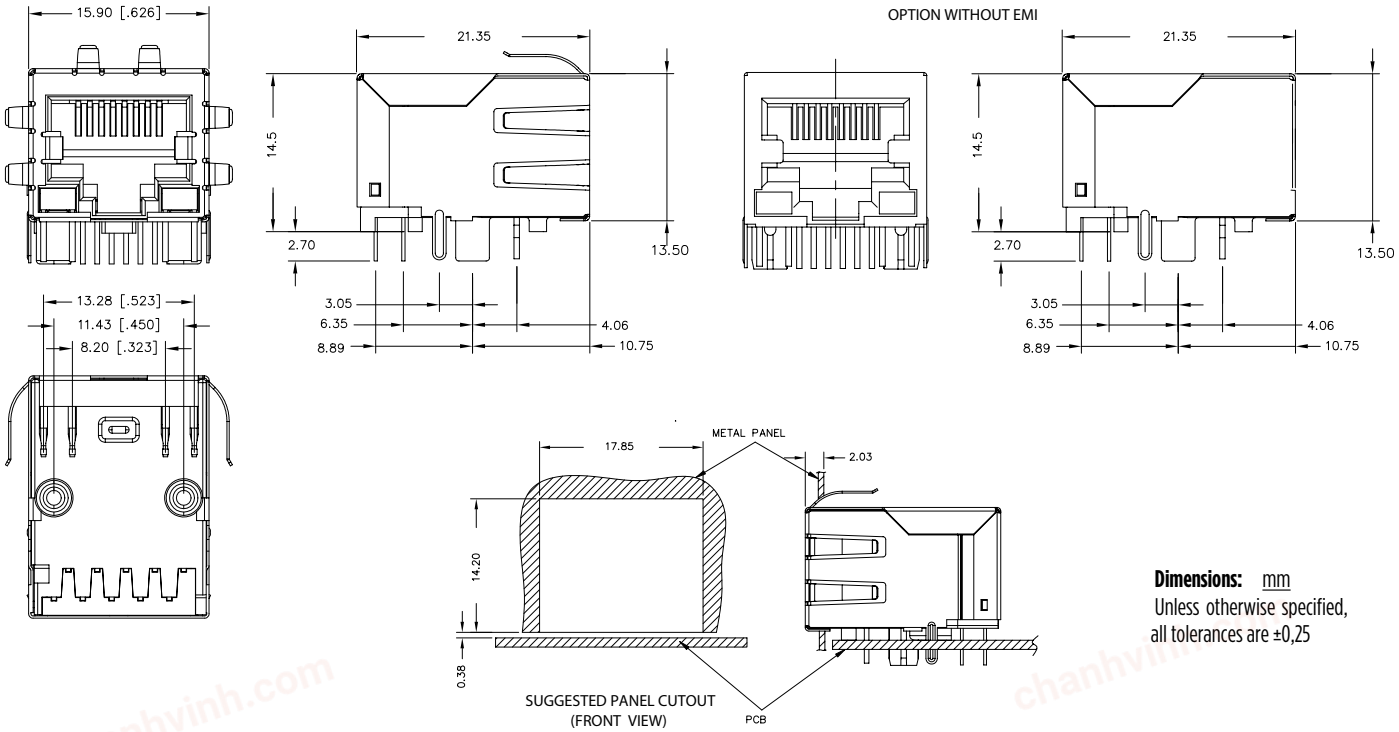

Dimensions: mm
Unless otherwise specified,
all tolerances are ±0,25

JXD1-90xxNL

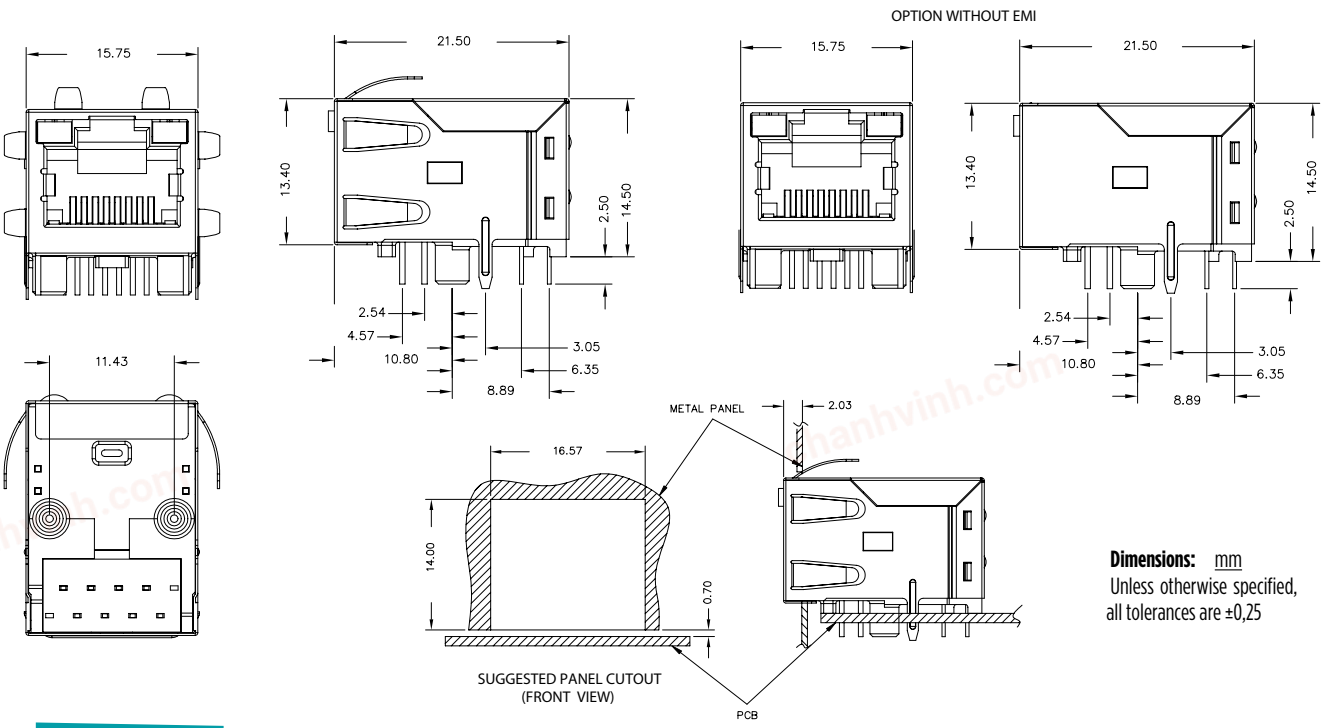

Dimensions: mm
Unless otherwise specified,
all tolerances are ±0,25

chanhvinh.com

Pin-in-Paste PulseJack™ Integrated Connector modules for Industrial Ethernet

Reflow compatible designs for fast Ethernet and 1Gigabit connectivity

SCHEMATICS

JXD0-9006/7NL, JXD1-9007/8NL

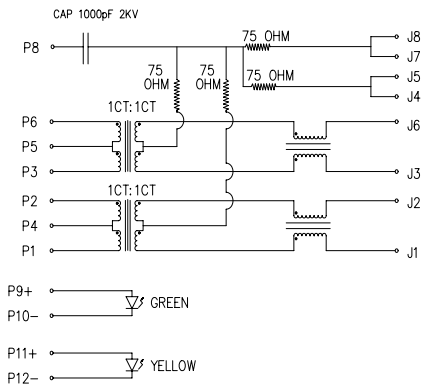

JXD0-9010/11NL

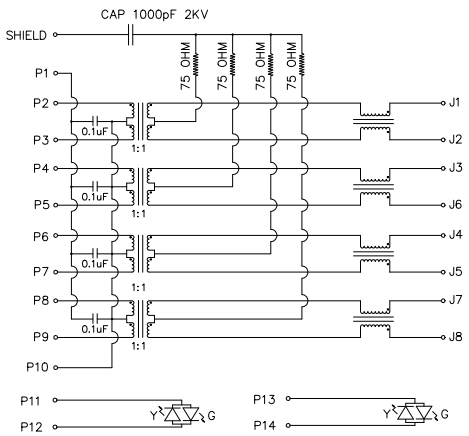

JXD0-9015/19NL

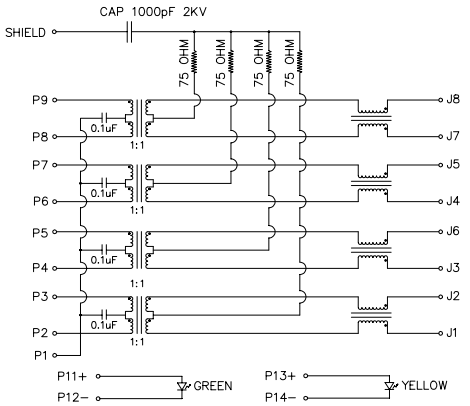

JXD1-9015NL

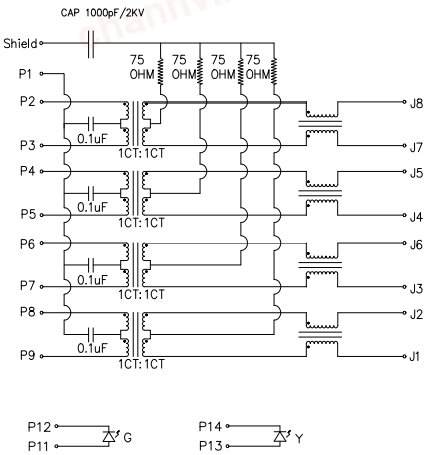

JXD1-9019NL

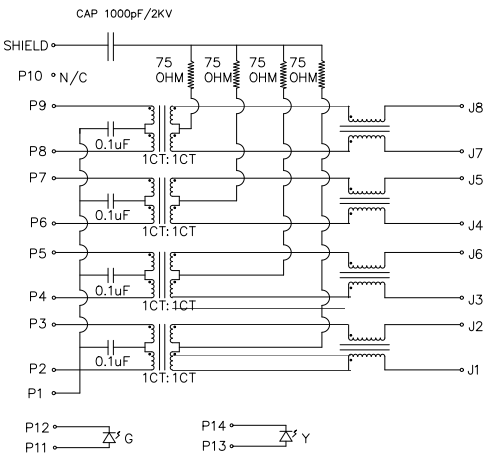

JXD1-9010/11NL

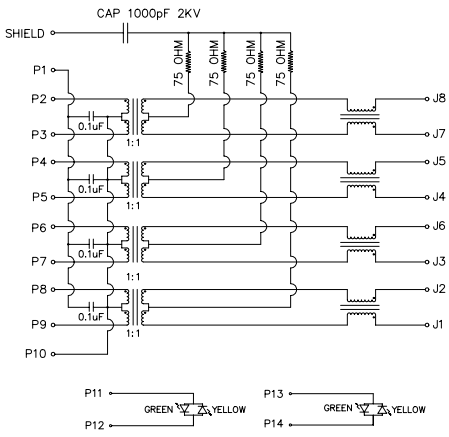

LED SPECIFICATIONS

EMITTING COLOR	p (nm)	Vf@If=20mA	Ir @Vr=5V
GREEN	570	1.7V~2.6V	10μA max.
YELLOW	590	1.7V~2.6V	10μA max.

chanhvinh.com

Pin-in-Paste PulseJack™ Integrated Connector modules for Industrial Ethernet

Reflow compatible designs for fast Ethernet and 1Gigabit connectivity

PCB LAYOUT

JXD0-9006/7NL

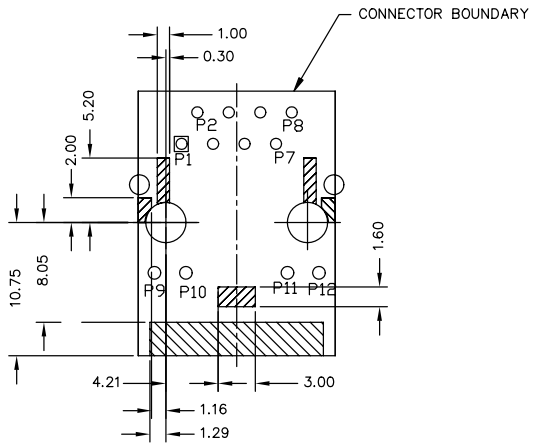

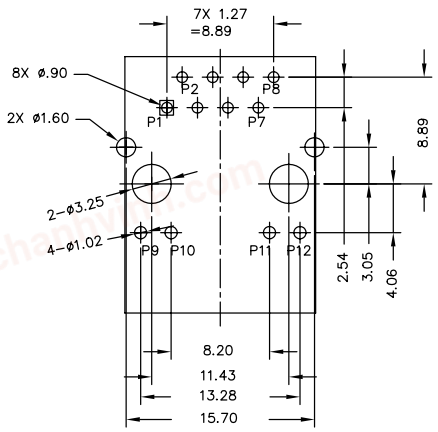

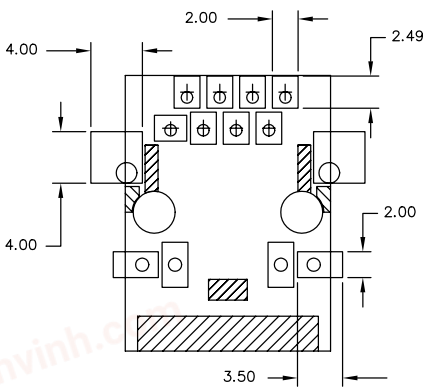

RECOMMENDED STENCIL DESIGN WITH THICKNESS 0.2MM
RECOMMENDED PCB WITH THICKNESS 1.6MM
(COMPONENT SIDE SHOWN)

JXD0-9010/11NL, JXD0-9015/19NL

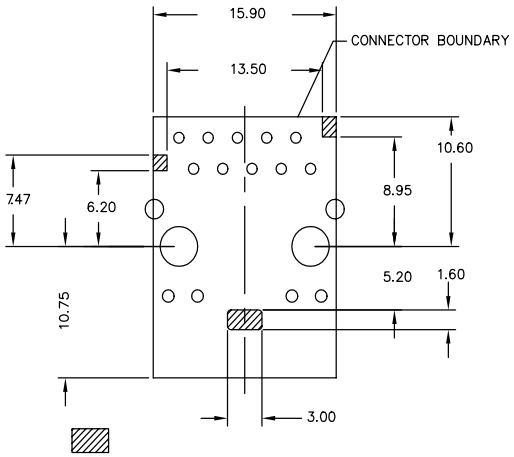

STANDOFF AREA
(COMPONENT SIDE SHOWN)

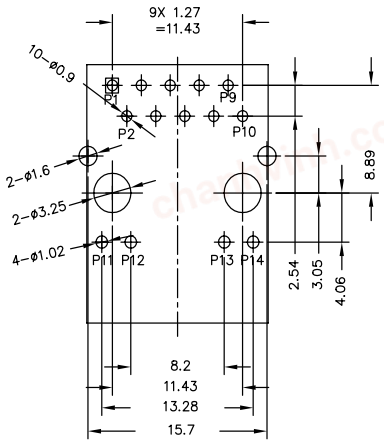

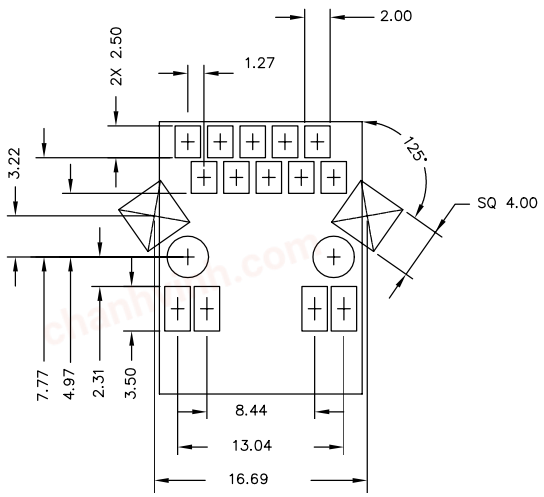

RECOMMENDED STENCIL DESIGN WITH THICKNESS 0.20MM
BASE ON 1.60MM THICKNESS PCB
(COMPONENT SIDE SHOWN)

chanhvinh.com

Pin-in-Paste PulseJack™ Integrated Connector modules for Industrial Ethernet

Reflow compatible designs for fast Ethernet and 1Gigabit connectivity

PCB LAYOUT

JXD1-9007/8NL

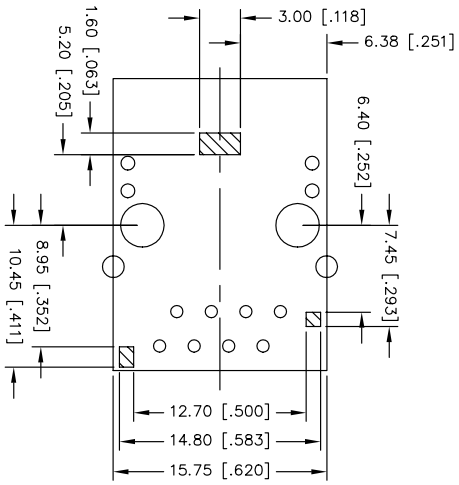

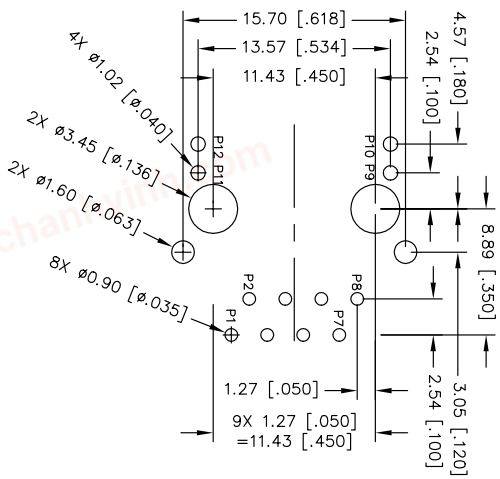

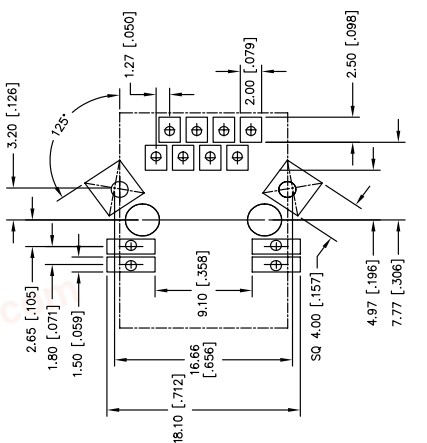

RECOMMENDED STENCIL DESIGN WITH 0.2mm THICKNESS
BASE ON 1.60MM THICKNESS PCB
(COMPONENT SIDE SHOWN)

STANDOFF AREA
(COMPONENT SIDE SHOWN)

JXD1-9010/11NL, JXD1-9015/19NL

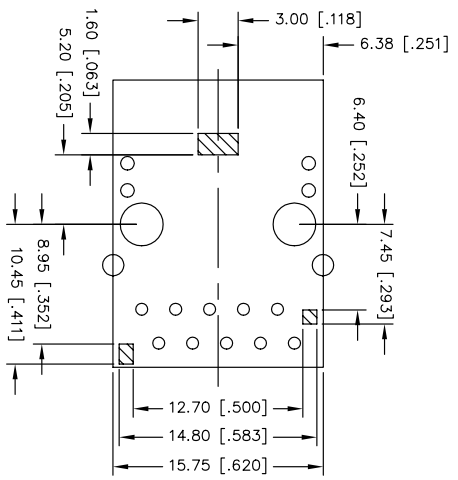

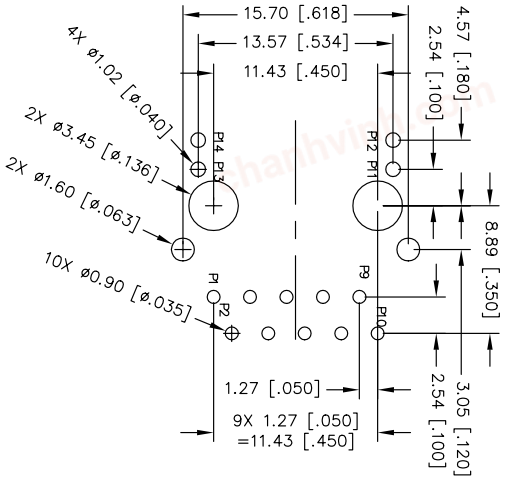

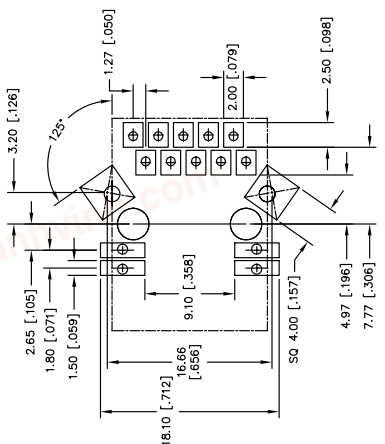

RECOMMENDED STENCIL DESIGN WITH 0.2mm THICKNESS
BASE ON 1.60MM THICKNESS PCB
(COMPONENT SIDE SHOWN)

chanhvinh.com

Pin-in-Paste **PulseJack™ Integrated Connector** modules for Industrial Ethernet

Reflow compatible designs for fast Ethernet and 1Gigabit connectivity

TAPE AND REEL PACKING DETAILS

JXD0-90xxNLT and JXD1-90xxNLT

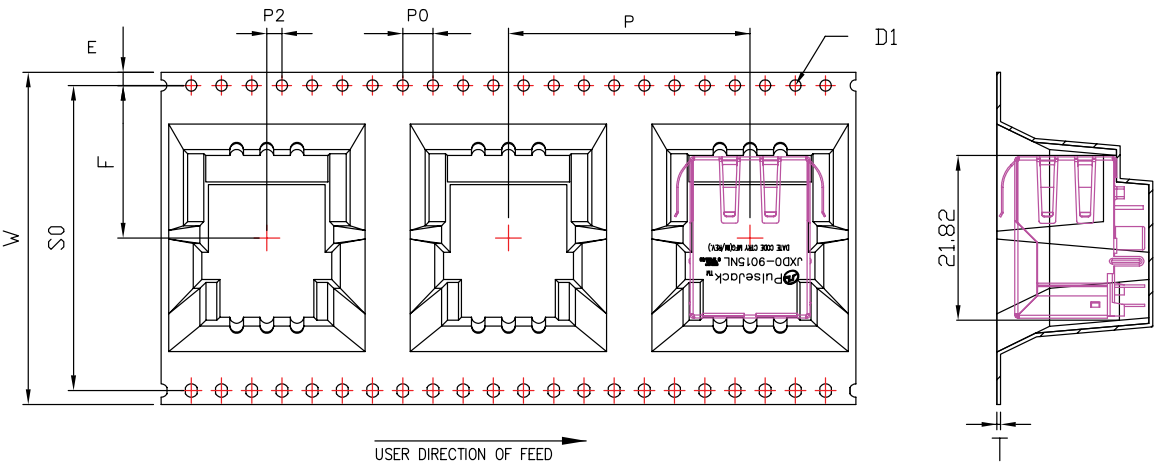

W	44.00 ±0.30	P	32.00 ±0.10	A0	16.196±0.15	B0	21.82±0.15
S0	40.40 ±0.10	P0	4.00 ±0.10	A1		B1	
E	1.75 ±0.10	P2	2.00 ±0.15	A2		B2	
F	20.20 ±0.15	D0	1.50 $^{+0.10}_{-0.00}$	K0	20.15±0.20	K1	15.85±0.15
T	0.50 ±0.05	D1		SCALE:	UNIT: mm		

JX01-900xxNL

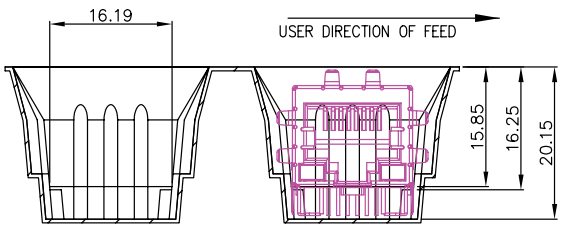

1.Material: Black Conductive Polystyrene Alloy.
2.Packing lenght per 13" reel: 2.2 Meters.
3.Component load per 13"reel: 60 pcs.
5 Reel in one box
300pcs in one box
4.All dimension meet EIA-481-D repuirements.

JXD1-90xxNL

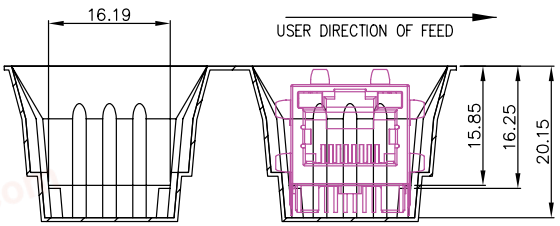

1.Material: Black Conductive Polystyrene Alloy.
2.Packing lenght per 13" reel: 2.2 Meters.
3.Component load per 13"reel: 60 pcs.
5 Reel in one box
300pcs in one box
4.All dimension meet EIA-481-D repuirements.

For More Information:
Americas - prodinfonetworkamericas@yageo.com | **Europe -** prodinfonetworkemea@yageo.com | **Asia -** prodinfonetworkapac@yageo.com

Performance warranty of products offered on this data sheet is limited to the parameters specified. Data is subject to change without notice. Other brand and product names mentioned herein may be trademarks or registered trademarks of their respective owners. © Copyright, 2022. Pulse Electronics, Inc. All rights reserved.