chanhvinh.com

Pulse Electronics
www.pulseelectronics.com

NOTES:

1. CONNECTOR MATERIAL:
   HOUISING:THERMOPLASTIC BLACK UL94 V-0
   SHIELD:Brass
   SHIELD PLATING:NICKEL
   CONTACT:PHOSPHOR BRONZE
   CONTACT PLATING: SELECTIVE GOLD, 6 MICRO-INCHS MIN IN CONTACT AREA
2. PIN NOT ELECTRICALLY CONNECTED MAYBE OMITTED SEE ELECTRICAL DRAWING FOR OMITTED PINS
3. RJ45 CAVITIES CONFORM TO FCC RULES AND REGULATION PART 68.
4. THE PART IS RECOMMENDDED FOR WAVE SOLDERING PROCESS PEAK SOLDERING TEMPERATURE IS 260°C MAX, 10 SECS MAX
5. OPERATING TEMPERATURE T=-40°C TO +85°C.
6. STORAGE TEMPERATURE T=-40°C TO +85°C.

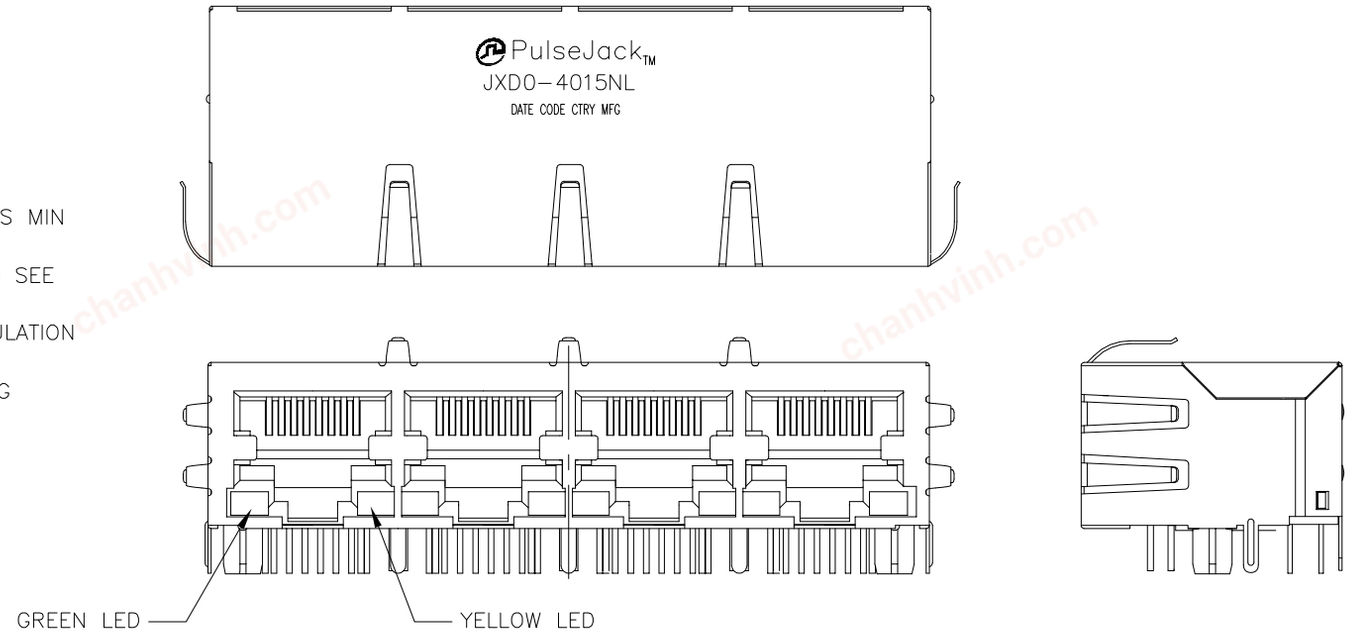

FINAL OUTLINE

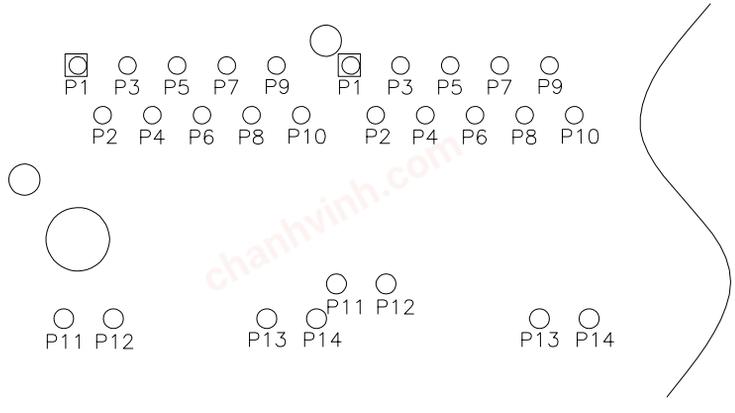

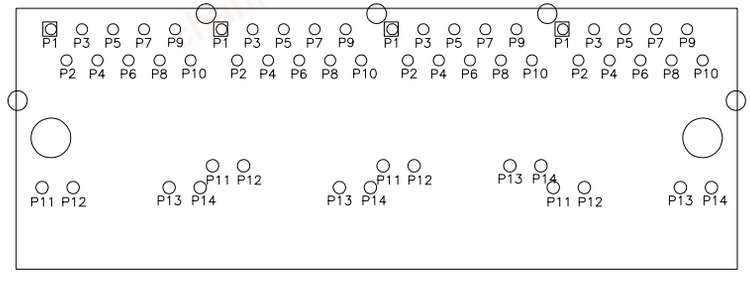

COMPONENT SIDE SHOWN

© Copyright, 2017. Pulse Electronics Corp. All rights reserved. Pulse confidential & proprietary. (07/13/17)

PRODUCT DESCRIPTION	TLA DRAWING	PS DRAWING	SHEET	PART NO.	DATASHEET REV.
CONN,RJ45,1X4,1GD,1:1,TY	JXD0-4015NL-P1	-	1 OF 5	JXD0-4015NL	A

E-MAIL: PRODINFONETWORK@PULSEELECTRONICS.COM(US), ASIA@PULSEELECTRONICS.COM(Asia) PHONE: USA:858 674 8100, GERMANY:49 7032 78060, SINGAPORE:65 6287 8998, SHANGHAI:86 21 62787060, TAIWAN:886 3 4356768

chanhvinh.com

Pulse Electronics
www.pulseelectronics.com

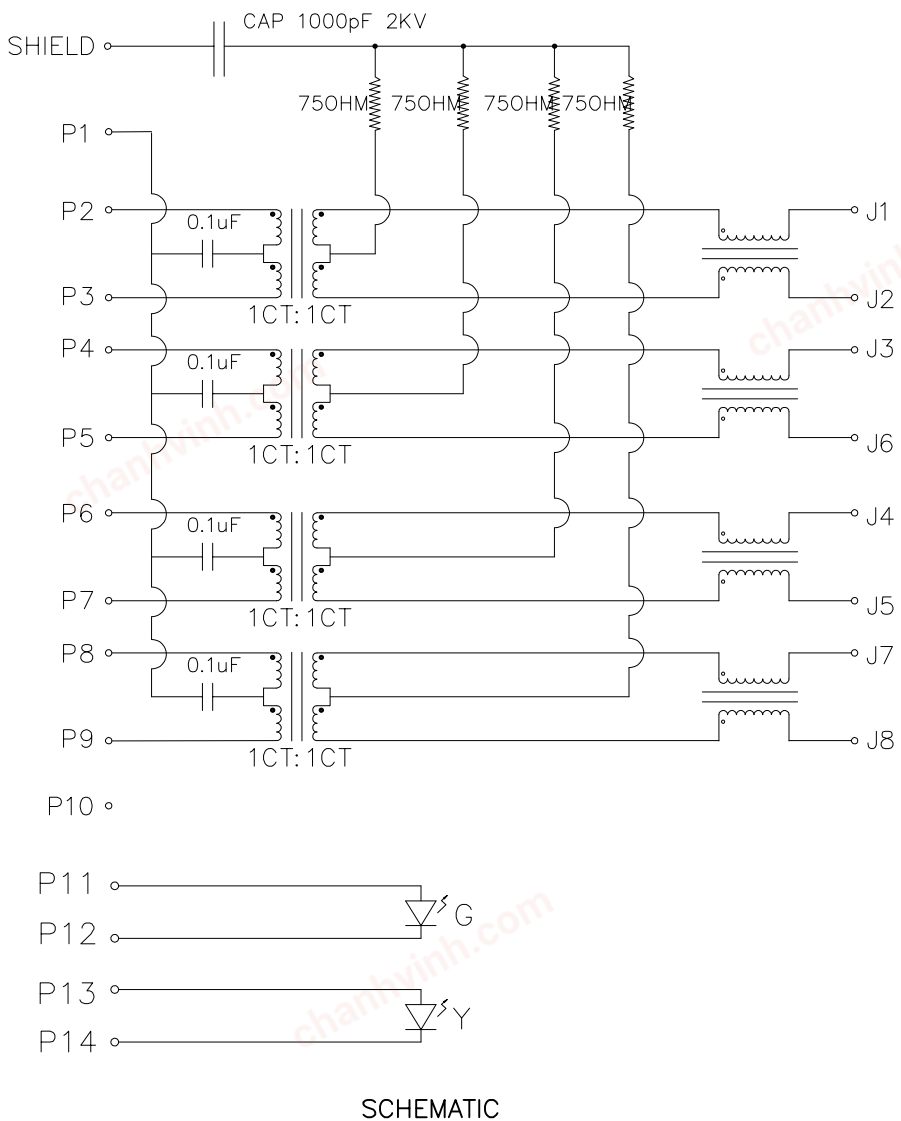

SCHEMATIC

ELECTRONICAL SPECIFICATIONS:

1. TURN RATIO @100KHz: (P2~P3):(J1~J2) = 1:1±5%
   (P4~P5):(J3~J6) = 1:1±5%
   (P6~P7):(J4~J5) = 1:1±5%
   (P8~P9):(J7~J8) = 1:1±5%
2. PRIMARY INDUCTANCE: 350uH MIN @100KHZ,0.1V 8mA DC BIAS
3. DC RESISTANCE: 1.2 OHMS MAX
4. INSERTION LOSS: 1−100MHz −1.0dB MAX
   100−125MHz −1.2dB MAX
5. RETURN LOSS: 1−40MHz −16dB MIN
   40−60MHz −12dB MIN
   60−80MHz −10dB MIN
   80−100MHz −8dB MIN
6. CROSS TALK: 1−100MHz −30dB MIN
7. COMMON TO COMMON MODE ATTENUATION: 1−100MHz −30dB MIN
8. ISOLATION: PHY SIDE TO LINE SIDE: 2250VDC

LED SPECIFICATION

STANDARD LED	WAVELENGTH	FORWARD V(MAX)	TYP
GREEN	565nm	2.4V	2.2V
YELLOW	590nm	2.5V	2.1V

*WITH A FORWARD CURRENT OF 20mA

@ Copyright, 2017. Pulse Electronics Corp. All rights reserved. Pulse confidential & proprietary. (07/13/17)

PRODUCT DESCRIPTION	TLA DRAWING	PS DRAWING	SHEET	PART NO.	DATASHEET REV.
CONN,RJ45,1X4,1GD,1:1,TY	JXD0−4015NL−P1	−	2 OF 5	JXD0−4015NL	A

E−MAIL: PRODINFONETWORK@PULSEELECTRONICS.COM(US), ASIA@PULSEELECTRONICS.COM(Asia) PHONE: USA:858 674 8100, GERMANY:49 7032 78060, SINGAPORE:65 6287 8998, SHANGHAI:86 21 62787060, TAIWAN:886 3 4356768

chanhvinh.com

Pulse Electronics
www.pulseelectronics.com

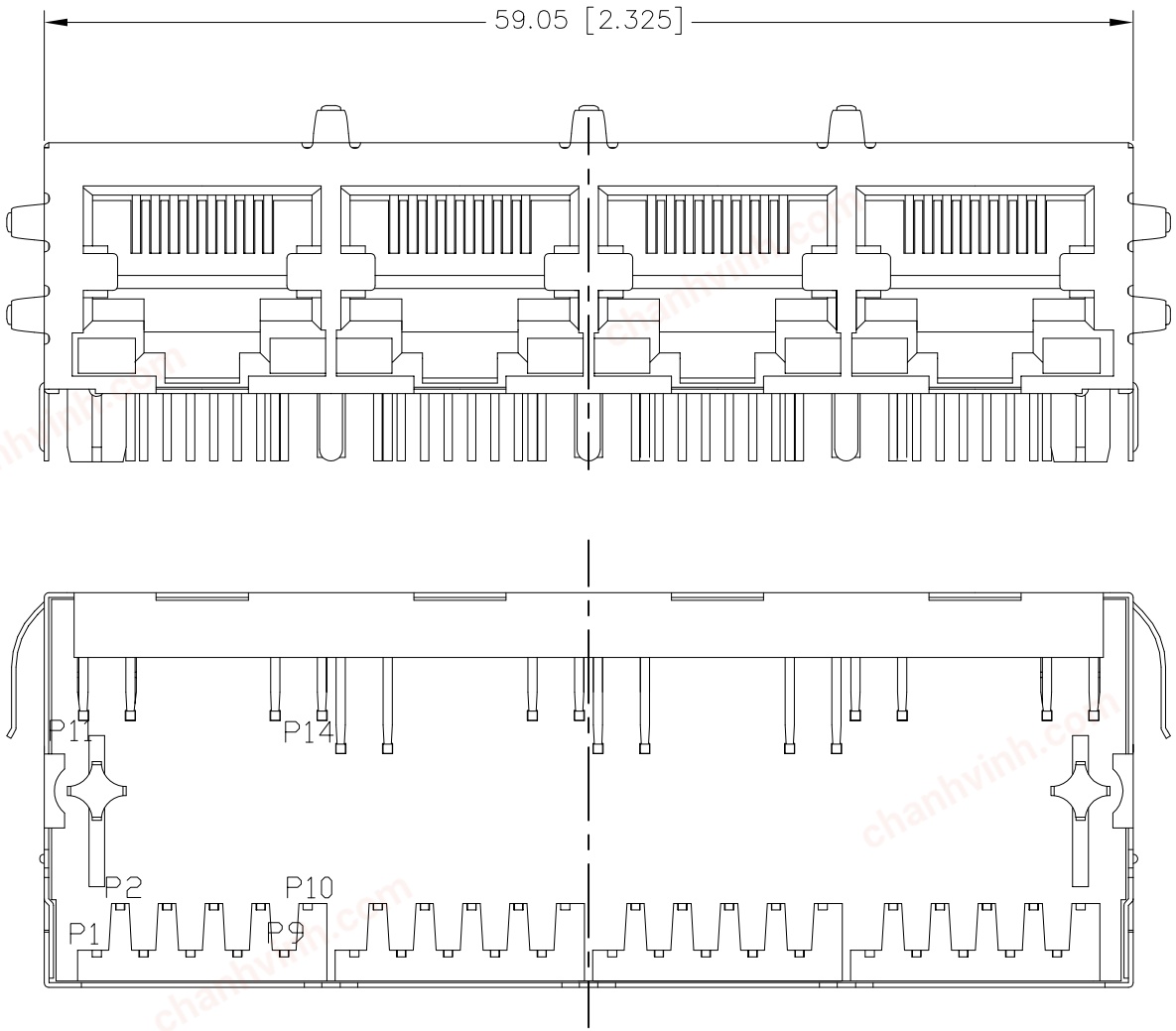

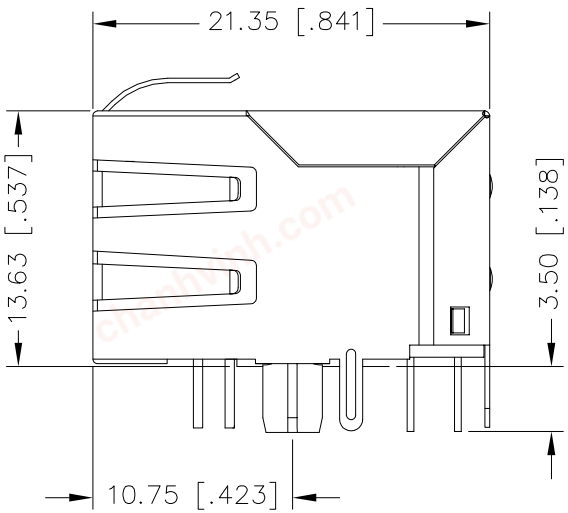

DIMENSIONS ARE IN MILLIMETERS [INCHES] WITH THE FOLLOWING
TOLERANCES: [INCHES] ARE FOR REFERENCE ONLY.
X.XX= ±0.25 [±.010]

© Copyright, 2017. Pulse Electronics Corp. All rights reserved. Pulse confidential & proprietary. (07/13/17)

PRODUCT DESCRIPTION	TLA DRAWING	PS DRAWING	SHEET	PART NO.	DATASHEET REV.
CONN,RJ45,1X4,1GD,1:1,TY	JXD0-4015NL-P1	-	3 OF 5	JXD0-4015NL	A

E-MAIL: PRODINFONETWORK@PULSEELECTRONICS.COM(US), ASIA@PULSEELECTRONICS.COM(Asia) PHONE: USA:858 674 8100, GERMANY:49 7032 78060, SINGAPORE:65 6287 8998, SHANGHAI:86 21 62787060, TAIWAN:886 3 4356768

chanhvinh.com

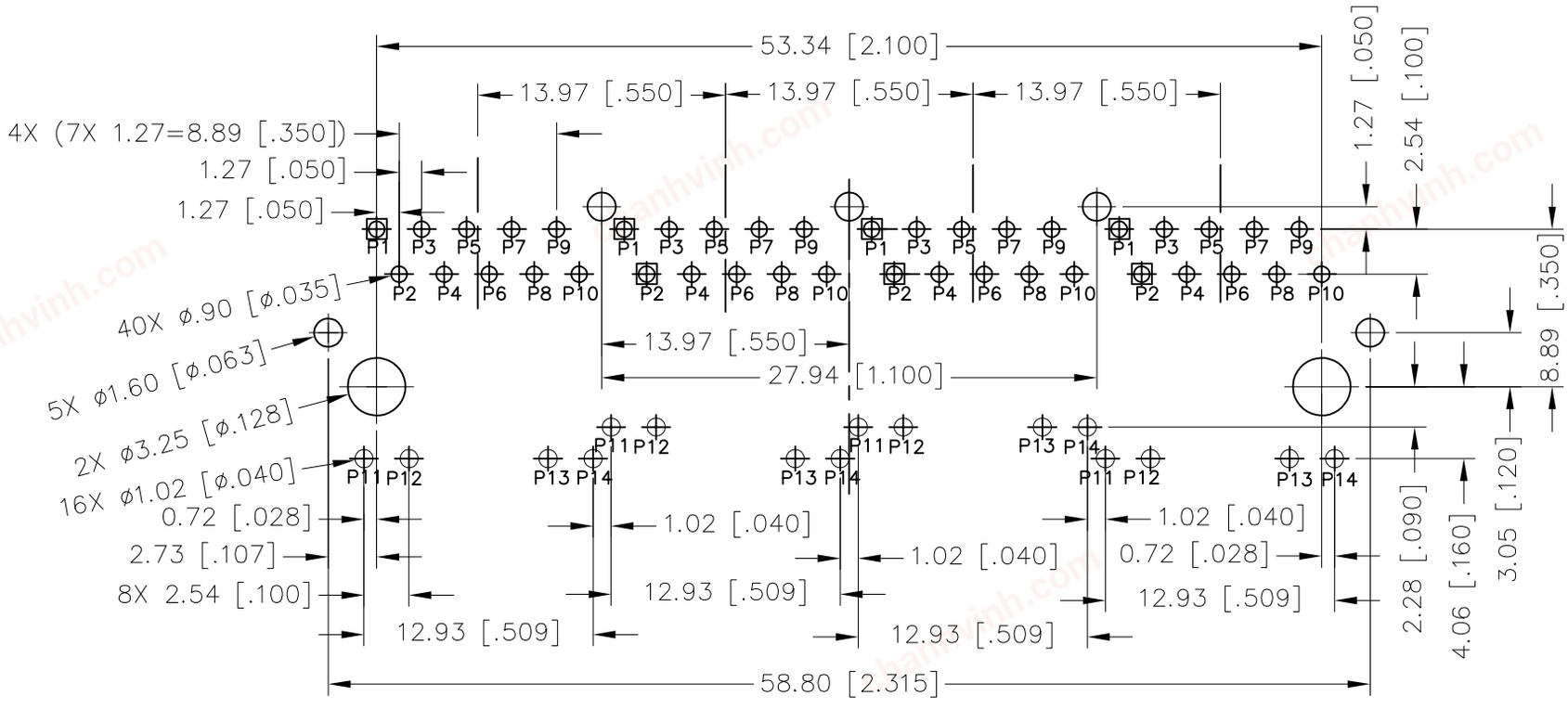

RECOMMENDED PCB LAYOUT (COMPONENT SIDE SHOWN)

DIMENSIONS ARE IN MILLIMETERS [INCHES] WITH THE FOLLOWING
TOLERANCES: [INCHES] ARE FOR REFERENCE ONLY.
X.XX= ±0.10 [±.004]

© Copyright, 2017. Pulse Electronics Corp. All rights reserved. Pulse confidential & proprietary. (07/13/17)

PRODUCT DESCRIPTION	TLA DRAWING	PS DRAWING	SHEET	PART NO.	DATASHEET REV.
CONN,RJ45,1X4,1GD,1:1,TY	JXD0-4015NL-P1	–	4 OF 5	JXD0-4015NL	A

chanhvinh.com

Pulse Electronics
www.pulseelectronics.com

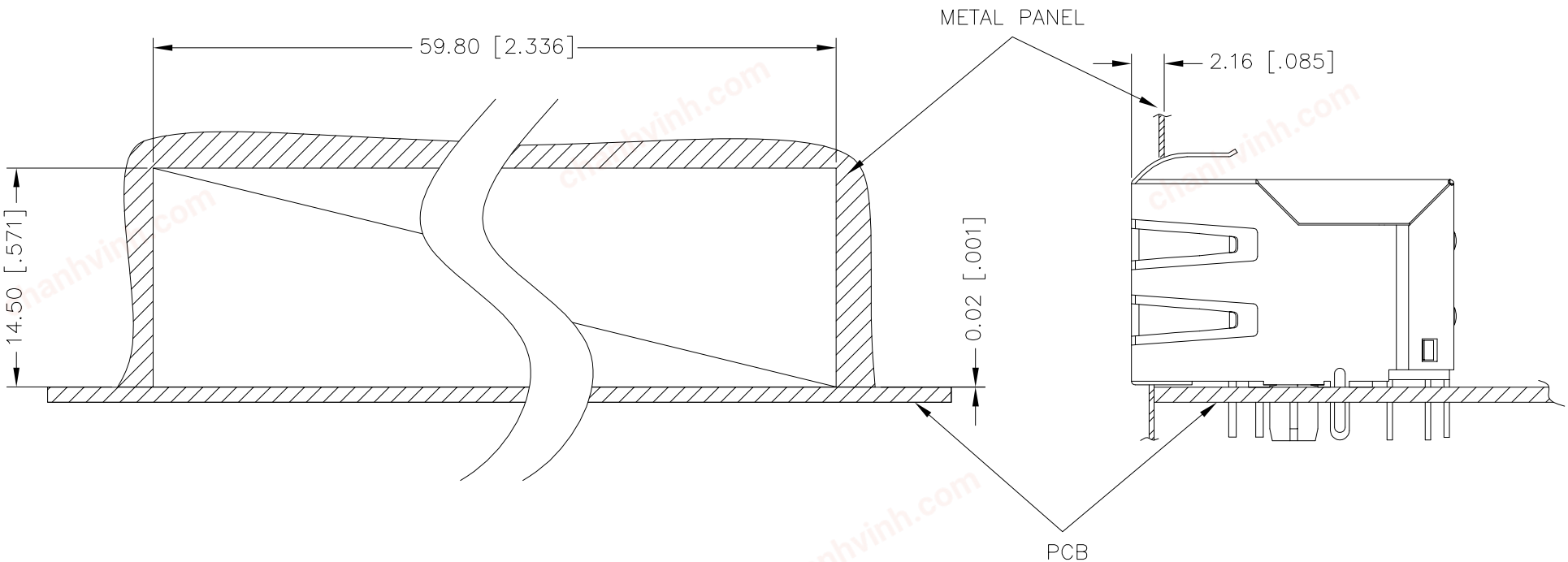

SUGGESTED PANEL CUTOUT

DIMENSIONS ARE IN MILLIMETERS [INCHES] WITH THE FOLLOWING
TOLERANCES: [INCHES] ARE FOR REFERENCE ONLY.
X.XX= ±0.10 [±.004]

© Copyright, 2017. Pulse Electronics Corp. All rights reserved. Pulse confidential & proprietary. (07/13/17)

PRODUCT DESCRIPTION	TLA DRAWING	PS DRAWING	SHEET	PART NO.	DATASHEET REV.
CONN,RJ45,1X4,1GD,1:1,TY	JXD0-4015NL-P1	-	5 OF 5	JXD0-4015NL	A

E-MAIL: PRODINFONETWORK@PULSEELECTRONICS.COM(US), ASIA@PULSEELECTRONICS.COM(Asia) PHONE: USA:858 674 8100, GERMANY:49 7032 78060, SINGAPORE:65 6287 8998, SHANGHAI:86 21 62787060, TAIWAN:886 3 4356768