chanhvinh.com

RoHS COMPLIANT

Pulse Electronics
www.pulseelectronics.com

NOTES:

1. ROHS COMPLIANT
2. PLASTIC HOUSING: THERMOPLASTIC MATERIAL WITH FLAMMABILITY RATING UL 94V-0 OR BETTER.
3. CONTACTS PLATING: 30 uINCHES GOLD PLATING.
4. CONTACTS BASE MATERIAL: PHOSPHOR BRONZE
5. UNDER PLATING: 30-50 uINCHES NICKEL
6. SOLDER TAIL PLATING : 200-500 uINCHES 100% TIN, MATTE FINISH.
7. METAL SHIELD: NICKEL PLATING ON COPPER ALLOY.
8. JACK CAVITY CONFORMS TO FCC PART 68 SUBPART.
9. PCB PLATING: HASL (TOP PCB), ENIG (BOTTOM PCB)
10. STORAGE TEMPERATURE: -50°C TO +125°C
11. COMPLIANCE TO J-STD:
    - A. J-STD-002: SOLDERABILITY AT 245°C DIP AND LOOK TEST
    - B. J-STD-020: LEVEL 1, NO MOISTURE SENSITIVE
    - C. J-STD-075: W2, 270°C MAXIMUM THROUGH WAVE SOLDER

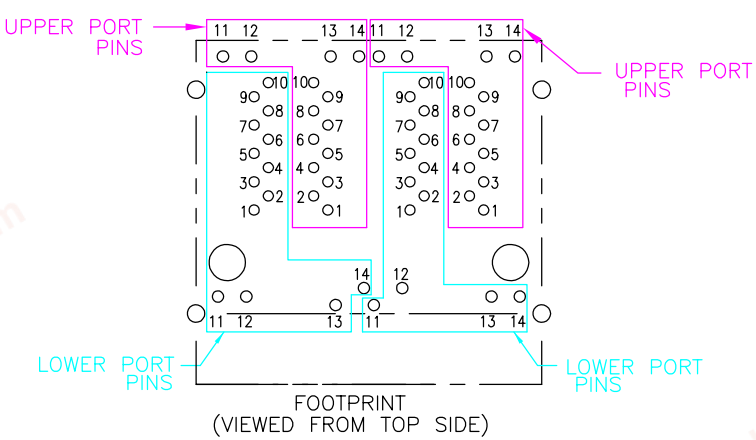

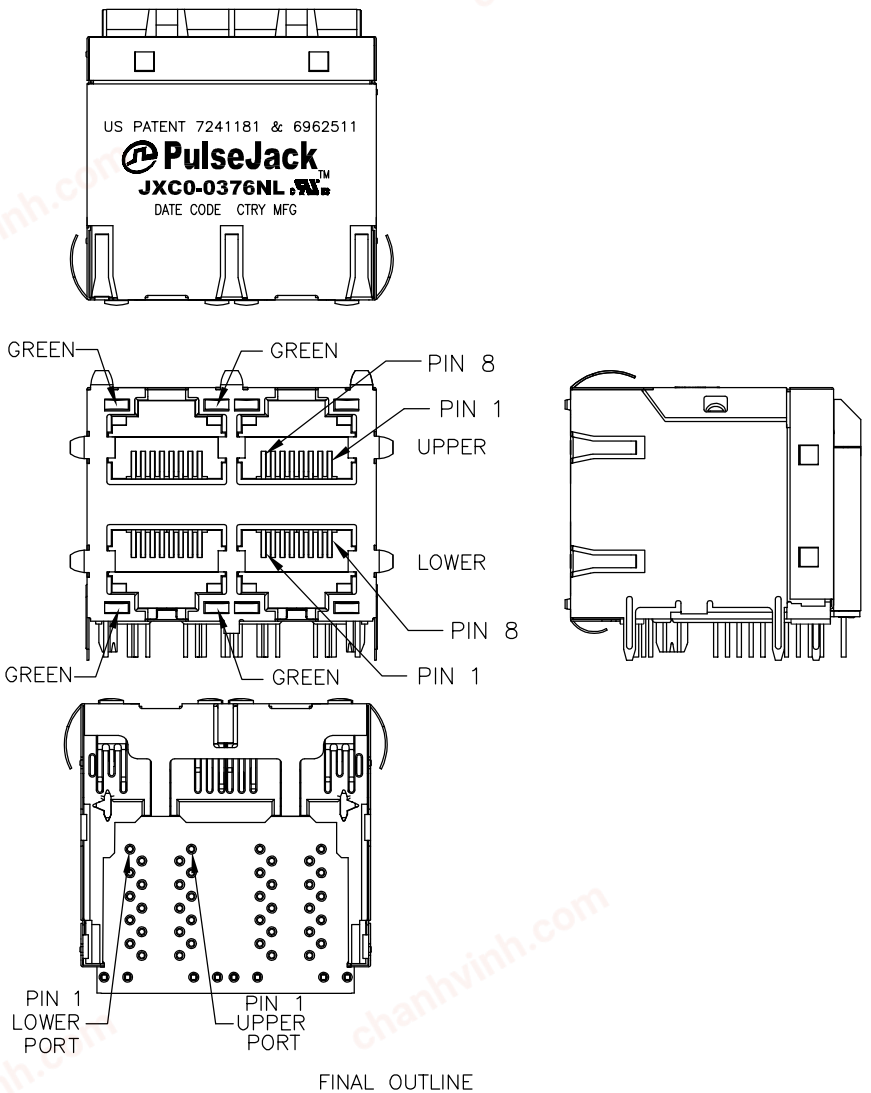

@ Copyright, 2016. Pulse Electronics Corp. All rights reserved. Pulse confidential & proprietary. (07/18/16)

PRODUCT DESCRIPTION	TLA DRAWING	PS DRAWING	SHEET	PART NO.	DATASHEET REV.
CONN,RJ45,2X2,1GD,1:1,TY	JXC0-0376NL-12	PS-2416.121-A	1 OF 4	JXC0-0376NL	A

E-MAIL: PRODINFONETWORK@PULSEELECTRONICS.COM(US), ASIA@PULSEELECTRONICS.COM(Asia) PHONE: USA:858 674 8100, GERMANY:49 7032 78060, SINGAPORE:65 6287 8998, SHANGHAI:86 21 62787060, TAIWAN:886 3 4356768

chanhvinh.com

RoHS COMPLIANT

Pulse Electronics
www.pulseelectronics.com

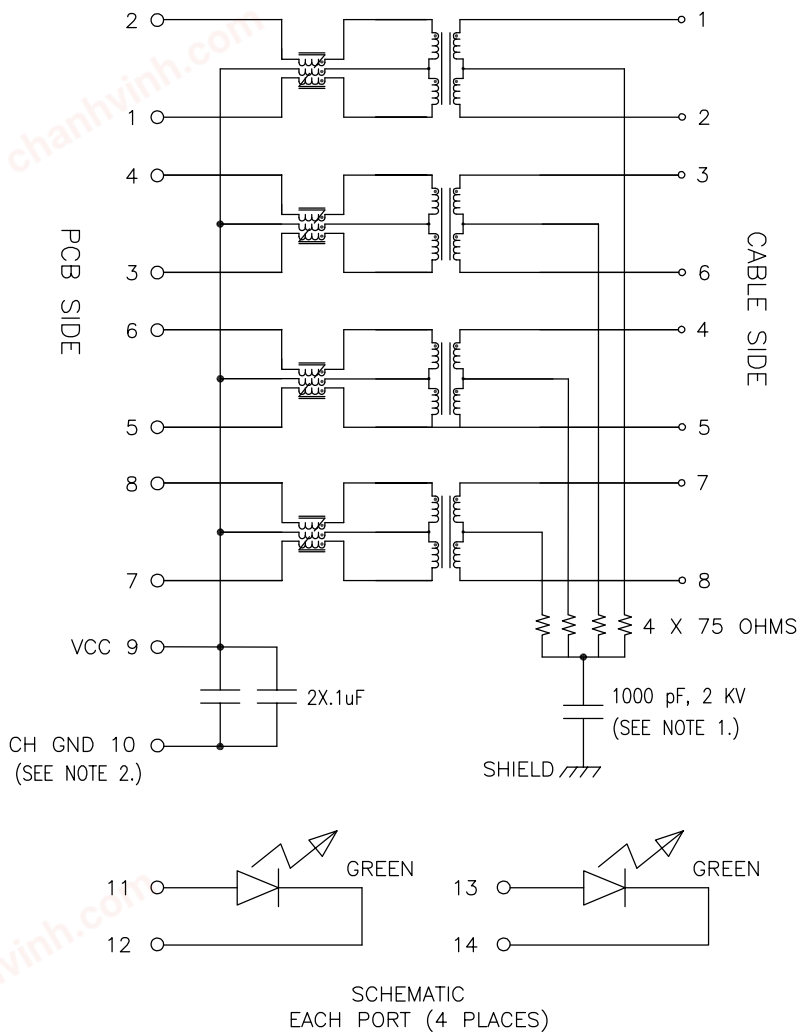

SCHEMATIC
EACH PORT (4 PLACES)

NOTE 1: HIGH-VOLTAGE CAPACITOR IS COMMON FOR UPPER AND LOWER PORTS.
NOTE 2: PIN 10 OF UPPER AND LOWER PORTS ARE SHORTED TOGETHER.

ELECTRICAL CHARACTERISTICS AT +25°C UNLESS OTHER SPECIFIED
MEETS IEEE 802.3 SPECIFICATION

PARAMETER	SPECIFICATIONS	
OPERATING TEMP	−40°C − 85°C	
TURNS RATIO	1.00 ± 2%	
POLARITY	PER SCHEMATIC	
INSERTION LOSS	100 KHz	1−125 MHz
	−1.2 dB MAX	$-0.2-0.002*f^{1.4}$ dB MAX
RETURN LOSS (Z OUT = 100 OHM ±15%)	.1−40 MHz	40−100 MHz
	−18 dB MIN	$-12+20*LOG_{10}(f/80\ MHz)$ dB MIN
INDUCTANCE (OCL) (MEDIA SIDE, −40°C−85°C)	350 uH MIN	(MEASURED AT 100 KHz, 100 mVRMS AND WITH 8 mA DC BIAS)
CROSSTALK, ADJACENT CHANNELS	1 MHz	10−100 MHz
	−50 dB MIN	$-55+22*LOG_{10}(f/10)$ dB MIN
COMMON MODE REJECTION RATIO	2 MHz	30−200 MHz
	−50 dB MIN	$-15+20*LOG_{10}(f/200)$ dB MIN
INPUT − OUTPUT ISOLATION	2250 VDC MIN @ 60 SECONDS	

NOTE: f IS FREQUENCY IN MHz.

EMMITTED COLOR	GREEN
WAVELENGTH (nm)	570 nM
BRIGTHNESS (mCD)	8 TYP. AT 20 mA
VIEWING ANGLE	100°
POWER DISSIPATION (Pd)	80 mW MAX
FORWARD VOLTAGE (Vf)	2.8 V MAXIMUM 2.2 V TYPICAL
REVERSE VOLTAGE (Vr)	5.0 V MAX

NOTE: PER VENDOR'S SPECIFICATIONS

@ Copyright, 2016. Pulse Electronics Corp. All rights reserved. Pulse confidential & proprietary. (07/18/16)

PRODUCT DESCRIPTION	TLA DRAWING	PS DRAWING	SHEET	PART NO.	DATASHEET REV.
CONN,RJ45,2X2,1GD,1:1,TY	JXC0−0376NL−12	PS−2416.121−A	2 OF 4	JXC0−0376NL	A

E−MAIL: PRODINFONETWORK@PULSEELECTRONICS.COM(US), ASIA@PULSEELECTRONICS.COM(Asia) PHONE: USA:858 674 8100, GERMANY:49 7032 78060, SINGAPORE:65 6287 8998, SHANGHAI:86 21 62787060, TAIWAN:886 3 4356768

chanhvinh.com

RoHS COMPLIANT

Pulse Electronics
www.pulseelectronics.com

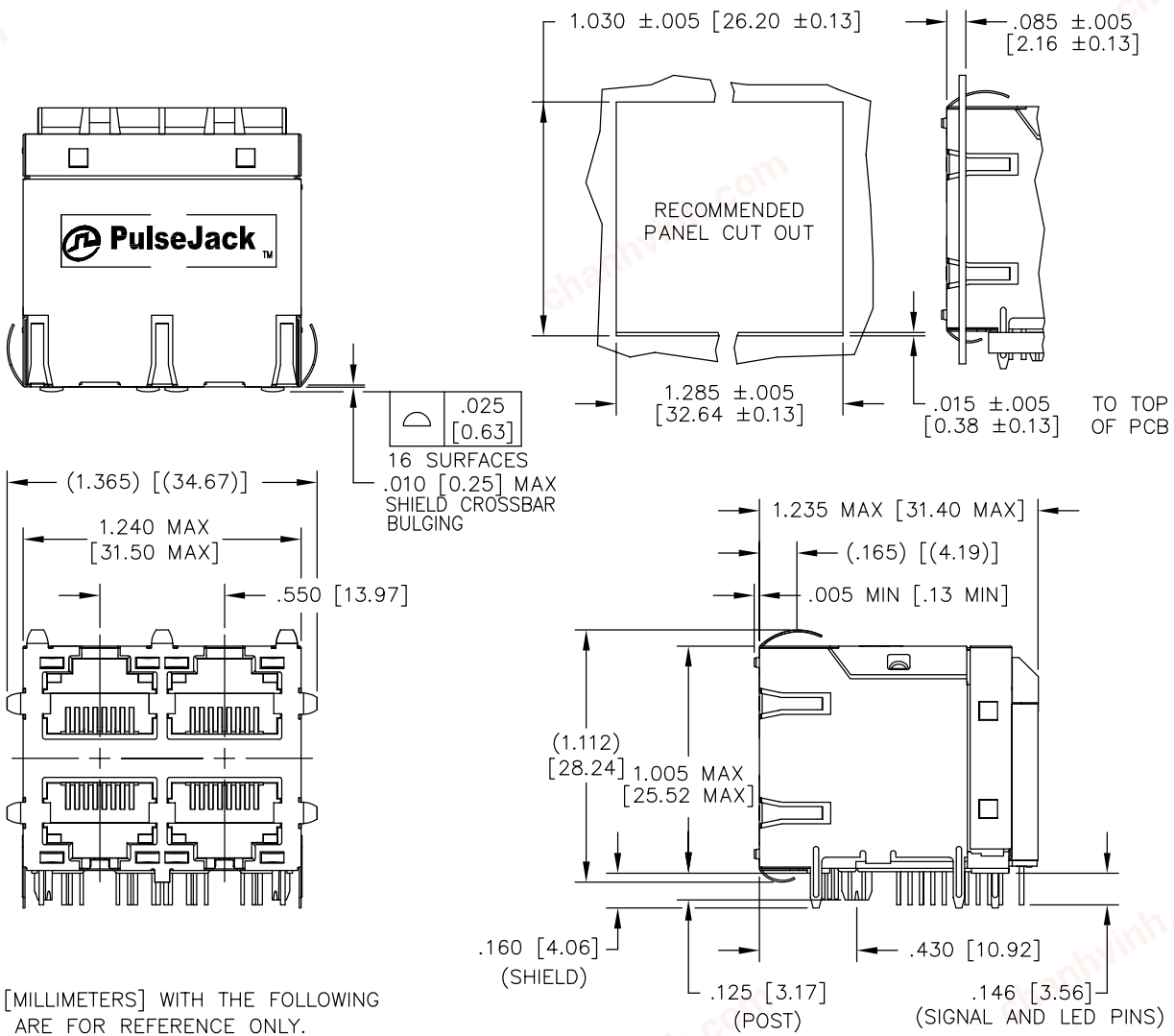

DIMENSIONS ARE IN INCHES [MILLIMETERS] WITH THE FOLLOWING TOLERANCES: [MILLIMETERS] ARE FOR REFERENCE ONLY.
.XX= ±.02 [±0.5]
.XXX= ±.010 [±0.25]

@ Copyright, 2016. Pulse Electronics Corp. All rights reserved. Pulse confidential & proprietary. (07/18/16)

PRODUCT DESCRIPTION	TLA DRAWING	PS DRAWING	SHEET	PART NO.	DATASHEET REV.
CONN,RJ45,2X2,1GD,1:1,TY	JXC0-0376NL-12	PS-2416.121-A	3 OF 4	JXC0-0376NL	A

E-MAIL: PRODINFONETWORK@PULSEELECTRONICS.COM(US), ASIA@PULSEELECTRONICS.COM(Asia) PHONE: USA:858 674 8100, GERMANY:49 7032 78060, SINGAPORE:65 6287 8998, SHANGHAI:86 21 62787060, TAIWAN:886 3 4356768

chanhvinh.com

RoHS COMPLIANT

Pulse Electronics
www.pulseelectronics.com

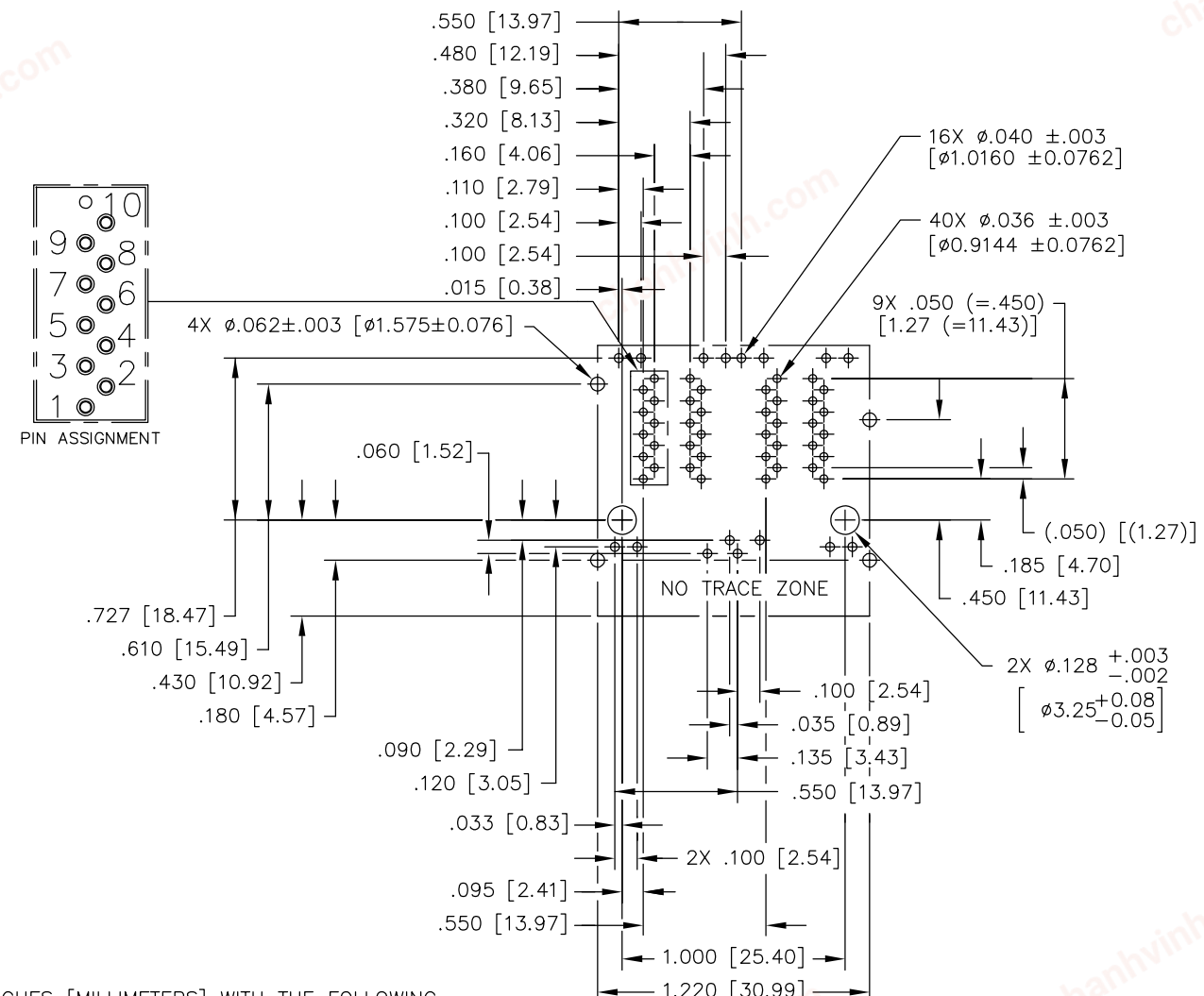

DIMENSIONS ARE IN INCHES [MILLIMETERS] WITH THE FOLLOWING TOLERANCES: [MILLIMETERS] ARE FOR REFERENCE ONLY.
.XX= ±.02 [±0.5]
.XXX= ±.010 [±0.25]

@ Copyright, 2016. Pulse Electronics Corp. All rights reserved. Pulse confidential & proprietary. (07/18/16)

PRODUCT DESCRIPTION	TLA DRAWING	PS DRAWING	SHEET	PART NO.	DATASHEET REV.
CONN,RJ45,2X2,1GD,1:1,TY	JXC0-0376NL-12	PS-2416.121-A	4 OF 4	JXC0-0376NL	A

E-MAIL: PRODINFONETWORK@PULSEELECTRONICS.COM(US), ASIA@PULSEELECTRONICS.COM(Asia) PHONE: USA:858 674 8100, GERMANY:49 7032 78060, SINGAPORE:65 6287 8998, SHANGHAI:86 21 62787060, TAIWAN:886 3 4356768