chanhvinh.com

RoHS COMPLIANT

Pulse Electronics
www.pulseelectronics.com

NOTES:

1. ROHS COMPLIANT
2. PLASTIC HOUSING: THERMOPLASTIC MATERIAL WITH FLAMMABILITY RATING UL 94V-0 OR BETTER.
3. CONTACTS PLATING: 30 MICROINCHES GOLD PLATING.
4. CONTACTS BASE MATERIAL: PHOSPHOR BRONZE
5. UNDER PLATING: 30-50 MICROINCHES DUCTILE NICKEL.
6. SOLDER TAIL PLATING : 200-500 MICROINCHES 100% TIN, MATTE FINISH.
7. METAL SHIELD: NICKEL PLATING ON COPPER ALLOY.
8. JACK CAVITY CONFORMS TO FCC RULES AND REGULATIONS PART 68 SUBPART F.
9. PCB PLATING: EG (TOP PCB), ENIG (BOTTOM PCB)
10. STORAGE TEMPERATURE: -50°C TO +125°C
11. COMPLIANCE TO J-STD:
    - A. J-STD-002: SOLDERABILITY AT 245°C DIP AND LOOK TEST
    - B. J-STD-020: LEVEL 1, NO MOISTURE SENSITIVE
    - C. J-STD-075: W2, 270°C MAXIMUM THROUGH WAVE SOLDER

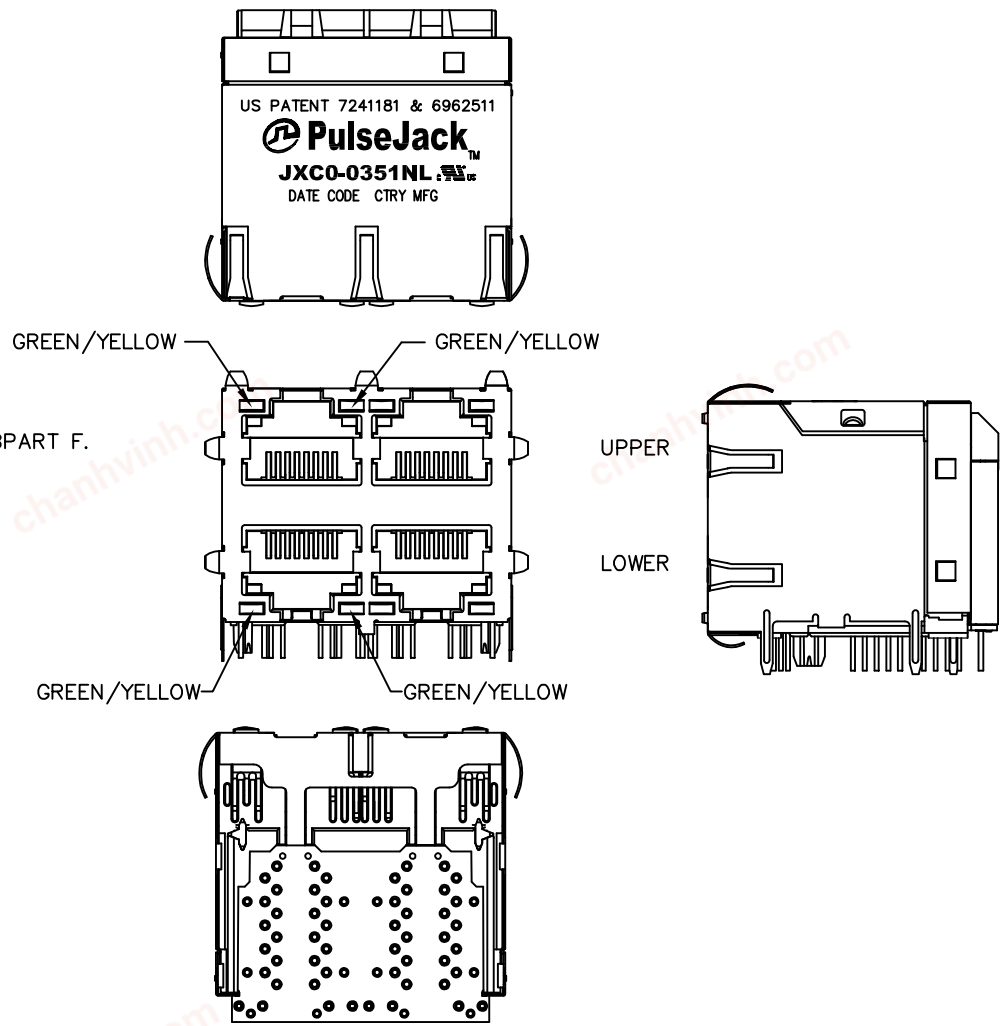

FINAL OUTLINE

@ Copyright, 2015. Pulse Electronics Corp. All rights reserved. Pulse confidential & proprietary. (12/18/15)

PRODUCT DESCRIPTION	TLA DRAWING	PS DRAWING	SHEET	PART NO.	DATASHEET REV.
CONN,RJ45,2X2,1GD,1:1,TY	JXC0-0351NL-11	PS-2416.121-A	1 OF 4	JXC0-0351NL	A

E-MAIL:PRODINFONETWORK@PULSEELECTRONICS.COM(US), ASIA@PULSEELECTRONICS.COM(Asia) PHONE: USA: 858 674 8100, GERMANY: 49 7032 78060, SINGAPORE: 65 6287 8998, SHANGHAI: 86 21 62787060, TAIWAN: 886 3 4356768

chanhvinh.com

RoHS COMPLIANT

Pulse Electronics
www.pulseelectronics.com

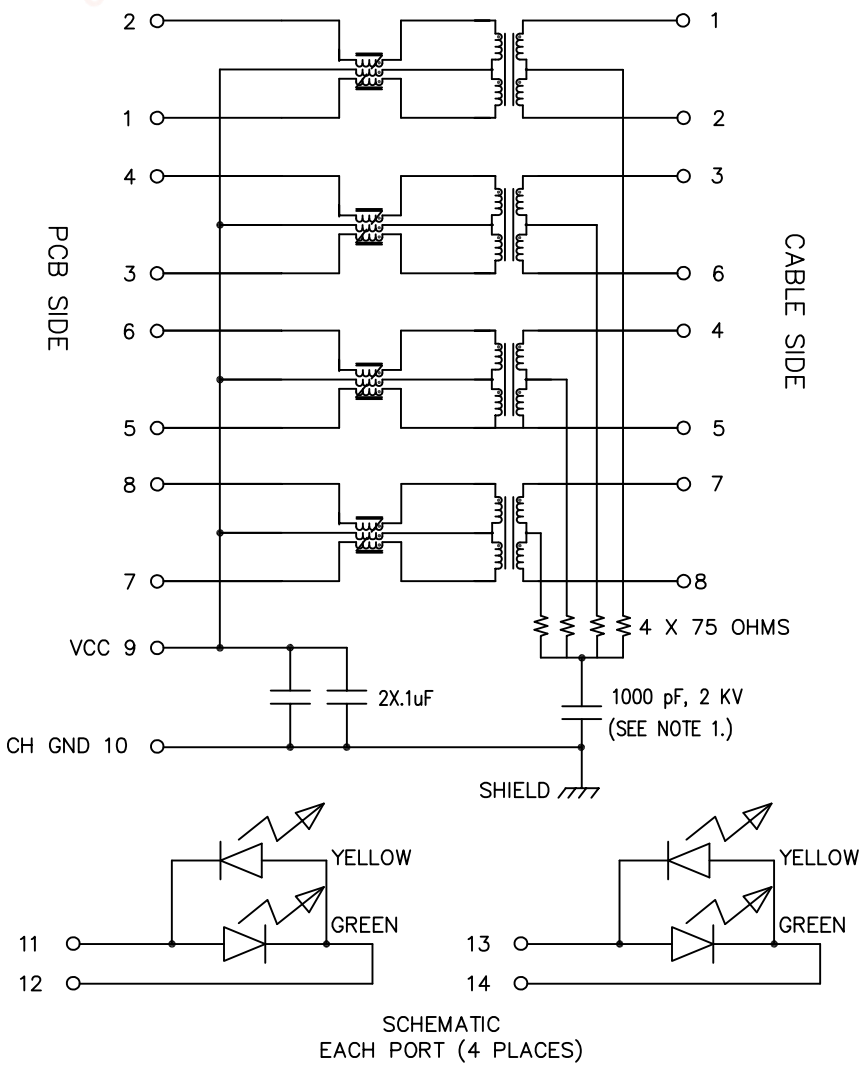

SCHEMATIC
EACH PORT (4 PLACES)

ELECTRICAL CHARACTERISTICS AT +25°C UNLESS OTHER SPECIFIED
(FOR REFERENCE ONLY. USED FOR CUSTOMER INFORMATION.)

PARAMETER	SPECIFICATIONS	
OPERATING TEMP	−40°C TO +85°C	
TURNS RATIO	1.00 ± 2%	
POLARITY	PER SCHEMATIC	
INSERTION LOSS	100 KHz	1−125 MHz
	−1.2 dB MAX	$-0.2-0.002*f^{1.4}$ dB MAX
RETURN LOSS (Z OUT = 100 OHM ±15%)	.1−40 MHz	40−100 MHz
	−18 dB MIN	$-12+20*\text{LOG}_{10}(f/80\ \text{MHz})$ dB MIN
INDUCTANCE (OCL) (MEDIA SIDE, −40°C~+85°C)	350 uH MIN	(MEASURED AT 100 KHz, 100 mVRMS AND WITH 8 mA DC BIAS
CROSSTALK, ADJACENT CHANNELS	1 MHz	10−100 MHz
	−50 dB MIN	$-55+22*\text{LOG}_{10}(f/10)$ dB MIN
COMMON MODE REJECTION RATIO	2 MHz	30−200 MHz
	−50 dB MIN	$-15+20*\text{LOG}_{10}(f/200)$ dB MIN
INPUT − OUTPUT ISOLATION	2250 VDC MIN @ 60 SECONDS	

NOTE: f IS FREQUENCY IN MHz.

EMMITTED COLOR	GREEN	YELLOW
WAVELENGTH (nm)	570 nM	587 nM
BRIGTHNESS (mCD)	8 TYP. AT 20 mA	6.5 TYP. AT 20 mA
VIEWING ANGLE	100°	100°
POWER DISSIPATION (Pd)	80 mW MAX	80 mW MAX
FORWARD VOLTAGE (Vf)	2.0 TO 2.6 V (UPPER PORT)	2.1 TO 2.6 V (UPPER PORT)
	2.2 TO 2.8 V (LOWER PORT)	2.15 TO 2.8 V (LOWER PORT)
REVERSE VOLTAGE (Vr)	5.0 V MAX	5.0 V MAX

NOTE: PER VENDOR'S SPECIFICATIONS

NOTE 1. HIGH−VOLTAGE CAPACITOR IS COMMON FOR UPPER AND LOWER PORTS.

© Copyright, 2015. Pulse Electronics Corp. All rights reserved. Pulse confidential & proprietary. (12/18/15)

PRODUCT DESCRIPTION	TLA DRAWING	PS DRAWING	SHEET	PART NO.	DATASHEET REV.
CONN,RJ45,2X2,1GD,1:1,TY	JXC0−0351NL−11	PS−2416.121−A	2 OF 4	JXC0−0351NL	A

E−MAIL:PRODINFONETWORK@PULSEELECTRONICS.COM(US), ASIA@PULSEELECTRONICS.COM(Asia) PHONE: USA: 858 674 8100, GERMANY: 49 7032 78060, SINGAPORE: 65 6287 8998, SHANGHAI: 86 21 62787060, TAIWAN: 886 3 4356768

chanhvinh.com

RoHS COMPLIANT

Pulse Electronics
www.pulseelectronics.com

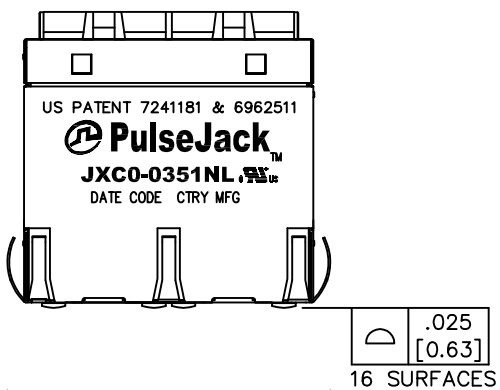

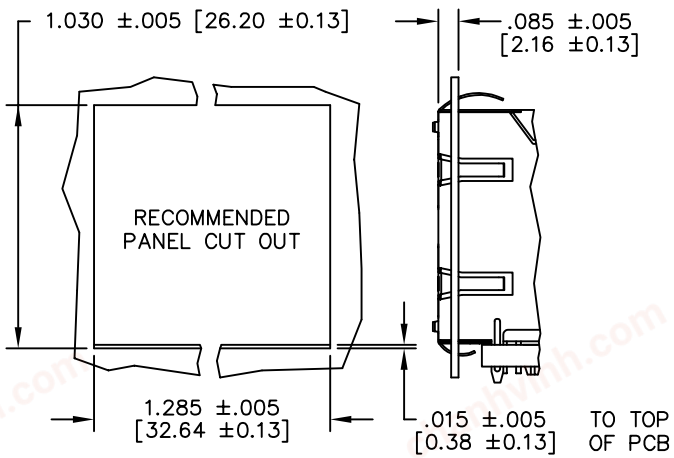

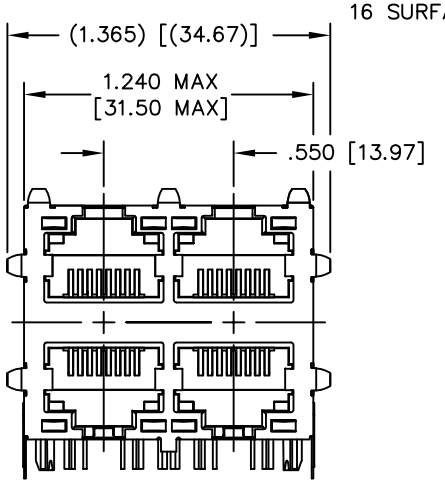

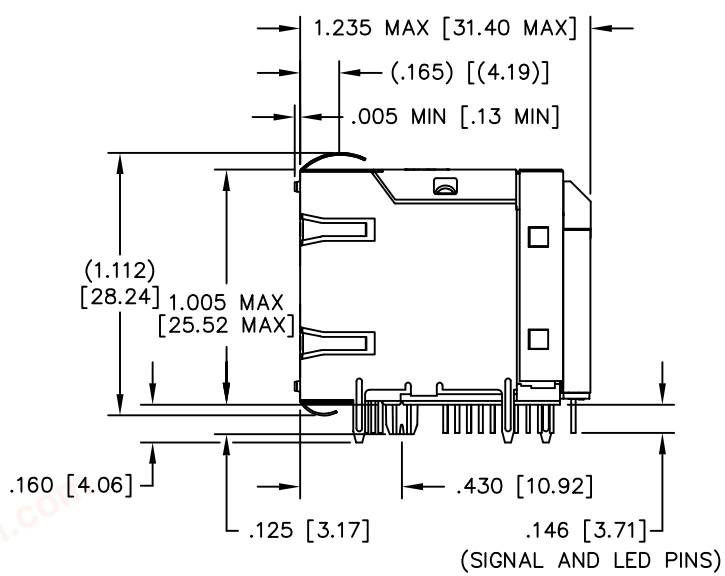

DIMENSIONS ARE IN INCHES [MILLIMETERS] WITH THE FOLLOWING
TOLERANCES: [MILLIMETERS] ARE FOR REFERENCE ONLY.
.XX= ±.02 [±0.5]
.XXX= ±.010 [±0.25]

© Copyright, 2015. Pulse Electronics Corp. All rights reserved. Pulse confidential & proprietary. (12/18/15)

PRODUCT DESCRIPTION	TLA DRAWING	PS DRAWING	SHEET	PART NO.	DATASHEET REV.
CONN,RJ45,2X2,1GD,1:1,TY	JXC0-0351NL-11	PS-2416.121-A	3 OF 4	JXC0-0351NL	A

E-MAIL:PRODINFONETWORK@PULSEELECTRONICS.COM(US), ASIA@PULSEELECTRONICS.COM(Asia) PHONE: USA: 858 674 8100, GERMANY: 49 7032 78060, SINGAPORE: 65 6287 8998, SHANGHAI: 86 21 62787060, TAIWAN: 886 3 4356768

chanhvinh.com

RoHS COMPLIANT

Pulse Electronics
www.pulseelectronics.com

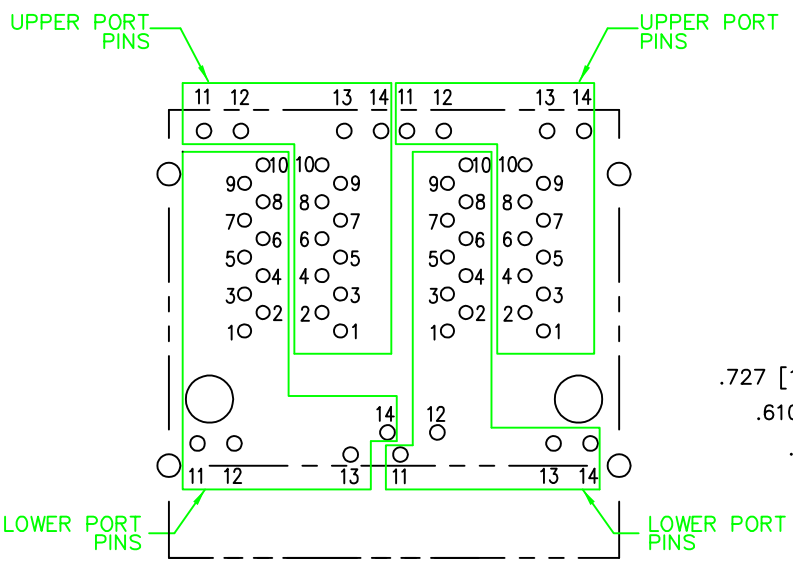

FOOTPRINT
(VIEWED FROM TOP SIDE)

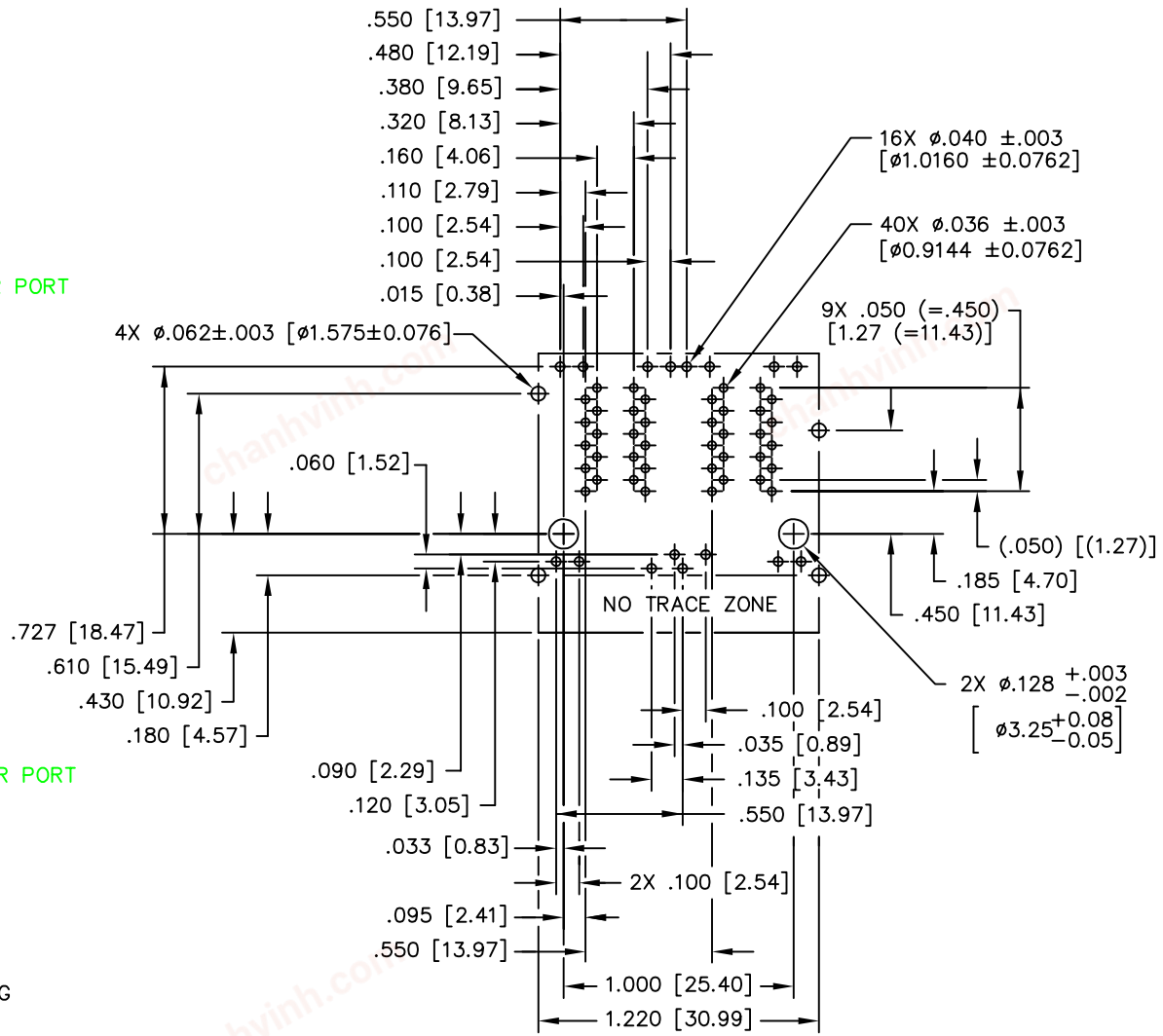

DIMENSIONS ARE IN INCHES [MILLIMETERS] WITH THE FOLLOWING TOLERANCES: [MILLIMETERS] ARE FOR REFERENCE ONLY.
.XX= ±.02 [±0.5]
.XXX= ±.010 [±0.25]

© Copyright, 2015. Pulse Electronics Corp. All rights reserved. Pulse confidential & proprietary. (12/18/15)

PRODUCT DESCRIPTION	TLA DRAWING	PS DRAWING	SHEET	PART NO.	DATASHEET REV.
CONN,RJ45,2X2,1GD,1:1,TY	JXC0-0351NL-11	PS-2416.121-A	4 OF 4	JXC0-0351NL	A

E-MAIL:PRODINFONETWORK@PULSEELECTRONICS.COM(US), ASIA@PULSEELECTRONICS.COM(Asia) PHONE: USA: 858 674 8100, GERMANY: 49 7032 78060, SINGAPORE: 65 6287 8998, SHANGHAI: 86 21 62787060, TAIWAN: 886 3 4356768