chanhvinh.com

Designed to Support 1G,2.5G,5G,10GBASE-T Transceivers

Pulse Jack™ 1X1 Tab-Down, Low profile ICM for PCI Express

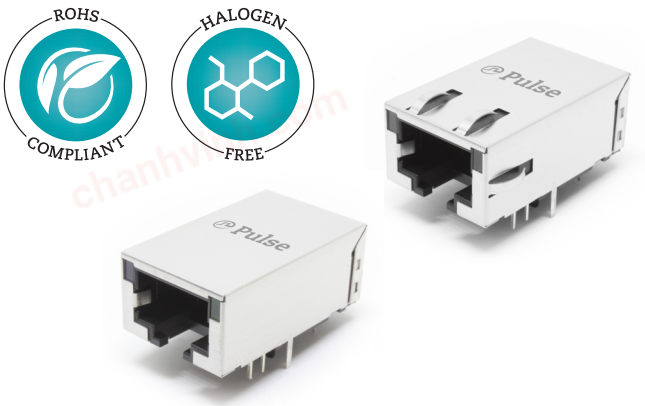

Features and Benefits:

- *Compliant with IEEE 802.3 standard*
- *MSL1 supports wave soldering 270°C max*
- *RoHS compliant and Halogen Free*
- *1X1 Side Entry, support up to 10GBASE-T*

Applications:

- *Access points*
- *Base Stations*
- *Switches*
- *Routers*
- *Process control*
- *Robot control*
- *Security display*
- *Smart Grid*

Electrical Specifications @ 25°C

Part Number[1]	Data Rate	POE	LEDs[2] (L/R)	EMI Tab	Insertion Loss (dB MAX)		Return Loss (dB MIN)				Comm. to Diff. Mode Rejection (dB MIN)		Cross Talk (dB or better)		Hipot (V_{DC} MIN)
					1-125 MHz	125-400 MHz	1-100 MHz	200 MHz	250 MHz	500 MHz	1-200 MHz	200-500 MHz	1-200 MHz	200-500 MHz	
JT4-1121CHL	1G	Non	Y/G-G	YES	-3	/	-10	/	/	/	-30	/	-28	/	2250
JT4-1141CHL	1G	60W	Y/G-G	YES	-3	/	-10	/	/	/	-30	/	-28	/	2250
JT4-2504CHL	2.5G	Non	Y/G-G	YES	-1	/	-14	-9.5	/	/	-30	/	-28	/	2250
JXT4-2008CHL	2.5G	90W	/	YES	-1	/	-14	-9.5	/	/	-30	/	-28	/	2250
JT4-5004CNL	5G	Non	Y/G-G	YES	-1	/	-14	-9.5	-8	/	-30	/	-28	/	2250
JT4-5005CNL	5G	90W	Y/G-G	YES	-1	/	-14	-9.5	-8	/	-30	/	-28	/	2250
JT4-1191CHL	10G	Non	Y/G-G	YES	-1	-3	-22	-17	-13.5	-8	-30	-22	-28	-19	2250
JT4-1173CHL	10G	Non	G-G/Y	YES	-1	-3	-22	-17	-13.5	-8	-30	-22	-28	-19	2250
JT4-1205CHL	10G	Non	Y/G-G	No	-1	-3	-22	-17	-13.5	-8	-30	-22	-28	-19	2250
JT4-1221CHL	10G	90W	Y/G-G	No	-1	-3	-22	-17	-13.5	-8	-30	-22	-28	-19	2250
JT4-1222CHL	10G	90W	Y/G-G	YES	-1	-3	-22	-17	-13.5	-8	-30	-22	-28	-19	2250

Notes:

1. LEDs: (Left/Right) G = green, Y = yellow
2. The Operating Temperature of all part numbers is 0 to 70°C except for JXT4-2008CHL(-40 to 85°C)
3. Storage Temperature of all part numbers is -20 to 125°C except for JXT4-2008CHL(-50 to 125°C)

RJ45 Durability Testing Rating

Part Number	Mating Force (MAX)	Unmating Force (MAX)	Durability	Plug to Jack Retention (MIN)
J*T4 Series	5 lbs./2.268 kgs.	5 lbs./2.268 kgs.	750 Insertions	20lbs./9.072 kgs.

RJ45 Material Specification

Part Number	Shield		Contact			Housing		MSL Rating
	Materials	Finish	Materials	Plating Area	Solder Area	Materials	Specification	
J*T4 Series	Stainless Steel		Brass	30μ inches gold over 30-50μ inches nickel	200-500μ inches tin over 50-100μ inches nickel	Thermoplastic	UL 94 V-0	1

Notes:

1. *=with X or without X.
2. Connector dimensions comply with FCC dimension requirements
3. MSL - Moisture Sensitivity Level
4. All parts are tin matte finish over nickel.
5. Solderability to ANSI/J-STD-001, IPC/EIA J-STD-003A

chanhvinh.com

MECHANICALS

JT4-1141CHL,JT4-5005CNL,JXT4-2008CHL,JT4-1221CHL,JT4-1222CHL

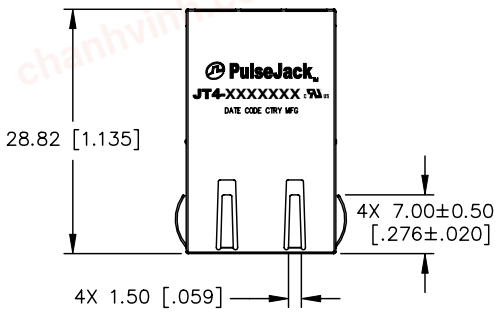

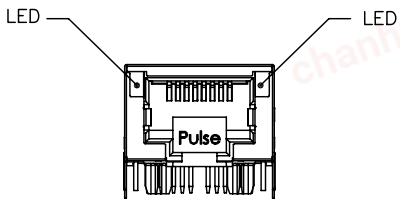

Front VIEW without EMI TABs

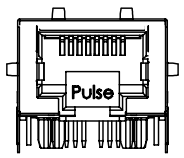

Front VIEW without LEDs

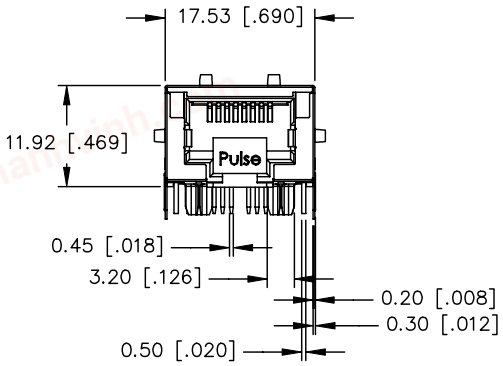

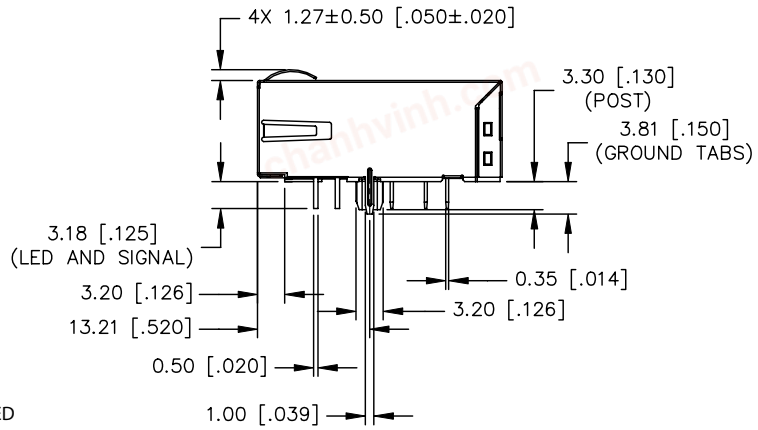

Note: 1. JXT4-2008CHL have all same dimension except for without LED
2. JT4-1221CHL have all same dimension except for without EMI TABs

PCB LAYOUTS

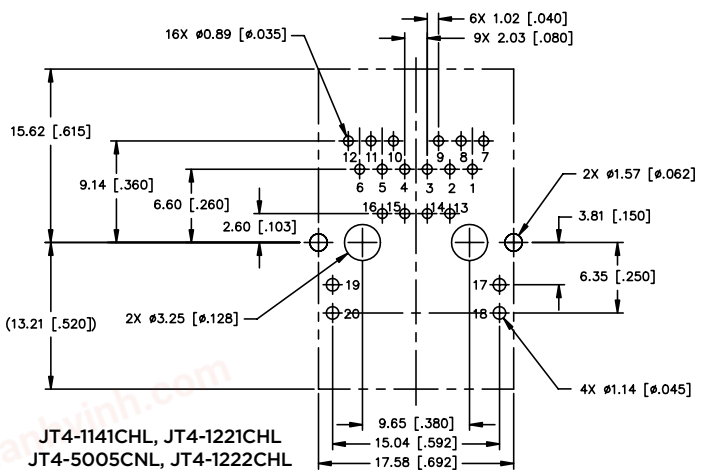

JT4-1141CHL, JT4-1221CHL
JT4-5005CNL, JT4-1222CHL

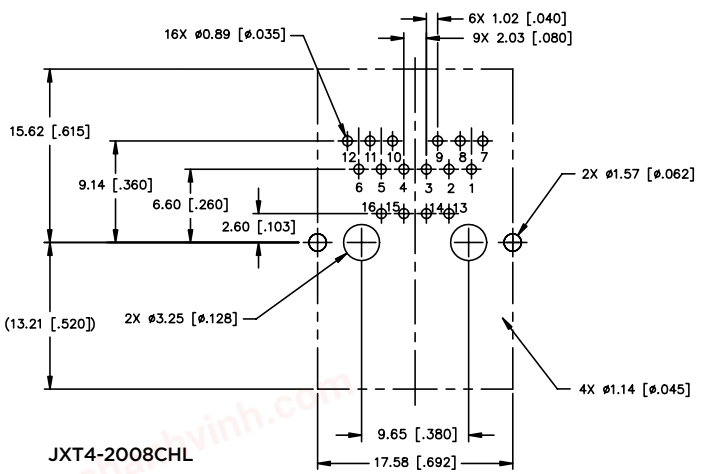

JXT4-2008CHL

ALL DIMENSIONS ARE IN MILLIMETERS - THE FOLLOWING TOLERANCES APPLY: x.xx = ±.008mm

chanhvinh.com

Designed to Support 1G,2.5G,5G,10GBASE-T Transceivers
Pulse Jack™ 1X1 Tab-Down, Low profile ICM for PCI Express

MECHANICALS

JT4-1121CHL,JT4-2504CHL,JT4-5004CNL,JT4-1191CHL, JT4-1205CHL,JT4-1173CHL

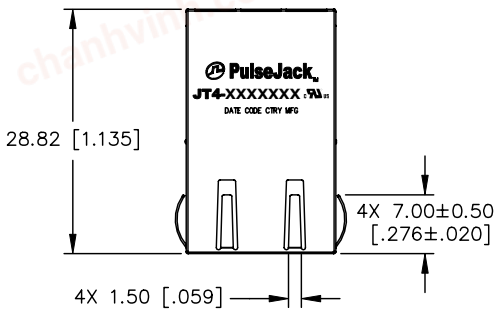

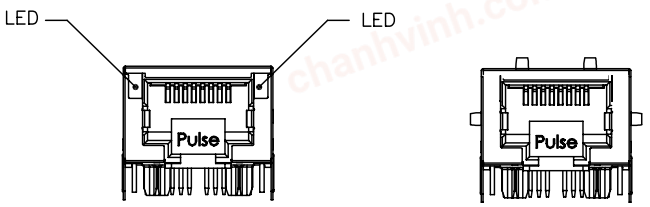

Front VIEW without EMI TABs

Front VIEW without LEDs

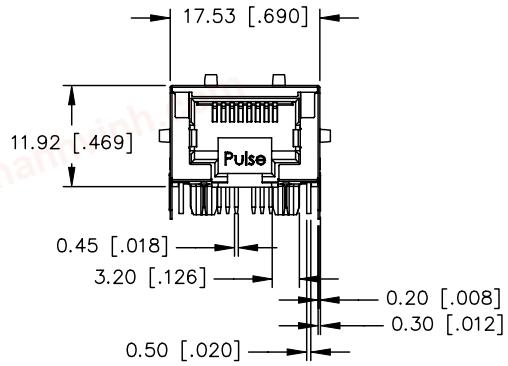

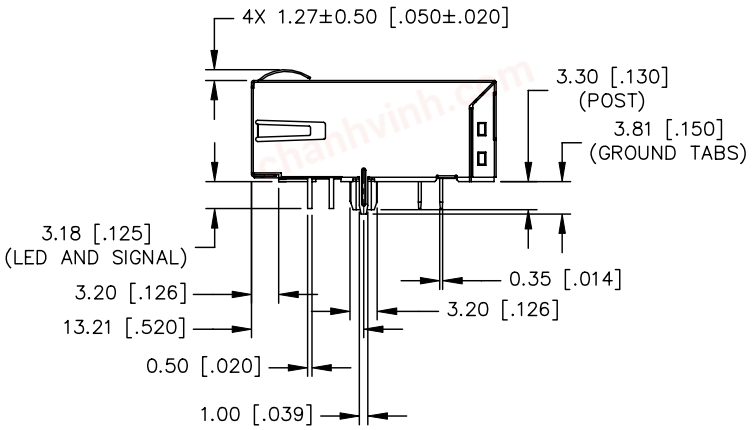

Note: 1. JT4-1205CHL have all same dimension except for without LED
2. JT4-1173CHL have all same dimension except for without EMI TABs

PCB LAYOUTS

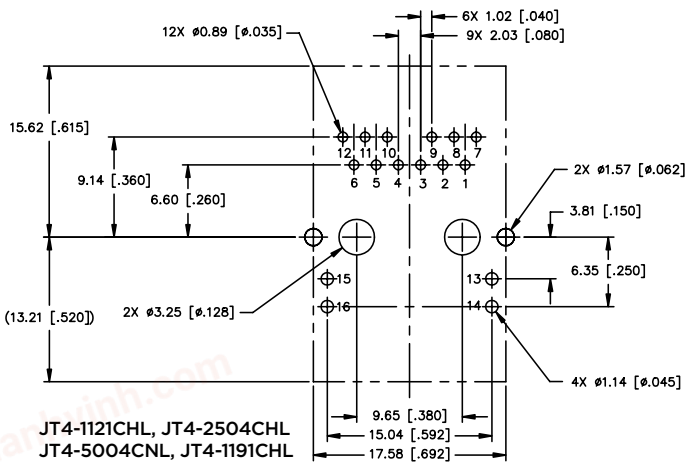

JT4-1121CHL, JT4-2504CHL
JT4-5004CNL, JT4-1191CHL
JT4-1205CHL

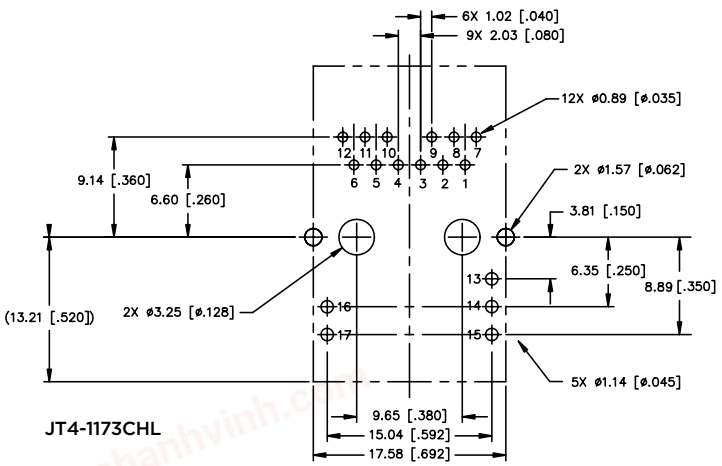

JT4-1173CHL

ALL DIMENSIONS ARE IN MILLIMETERS - THE FOLLOWING TOLERANCES APPLY: x.xx = ±.008mm

chanhvinh.com

SUGGESTED PANEL CUT

J*T4 Series

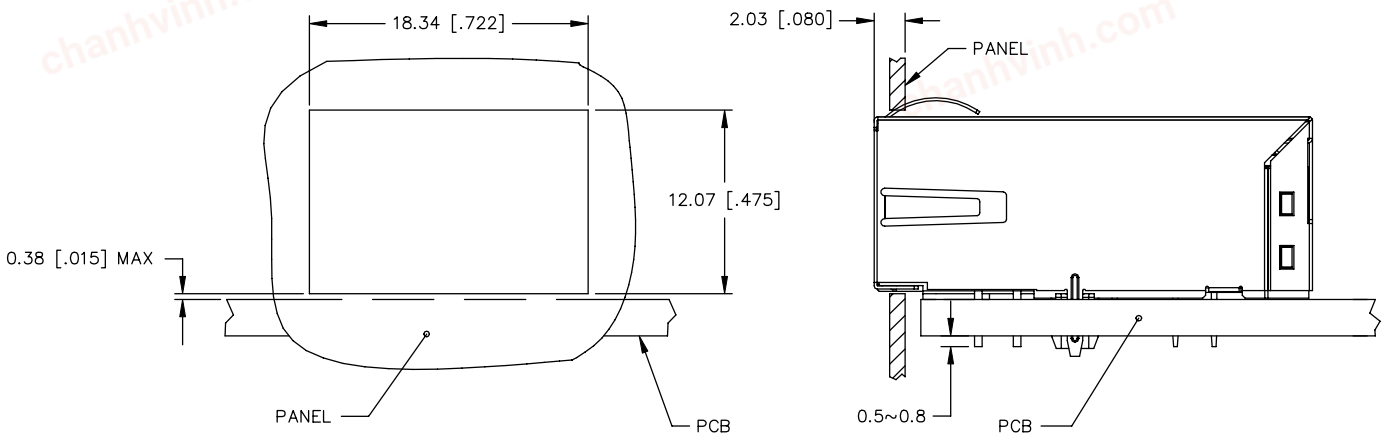

SUGGESTED PANEL CUTOUT

SCHEMATICS

JT4-1141CHL,JT4-5005CNL,JT4-1221CHL,JT4-1222CHL

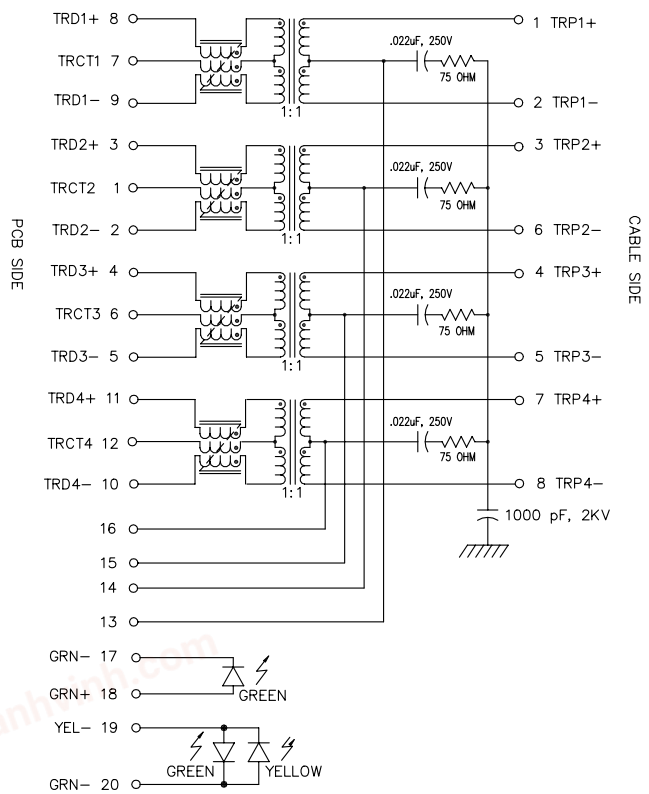

JXT4-2008CHL

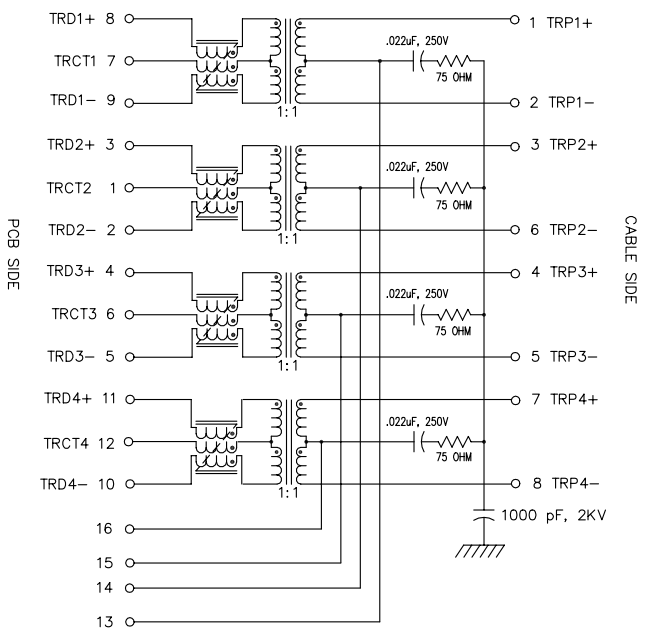

Designed to Support 1G,2.5G,5G,10GBASE-T Transceivers

Pulse Jack™ 1X1 Tab-Down, Low profile ICM for PCI Express

SCHEMATICS

JT4-5004CNL

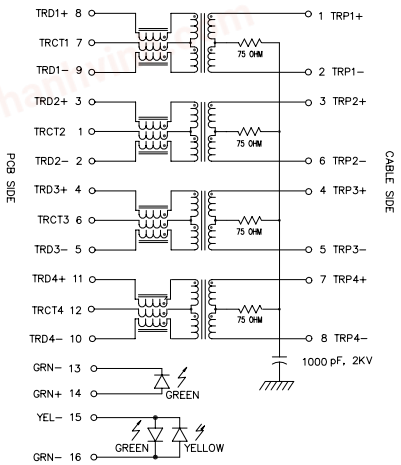

JT4-1121CHL,JT4-2504CHL,JT4-1205CHL,JT4-1191CHL

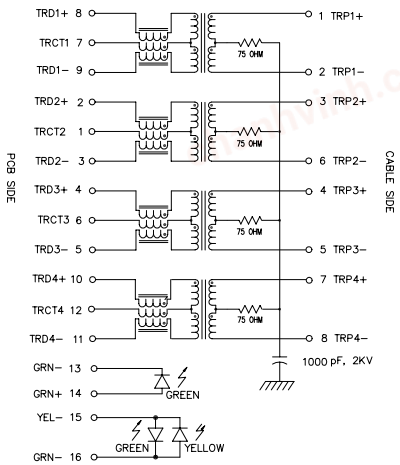

SCHEMATICS

JT4-1173CNL

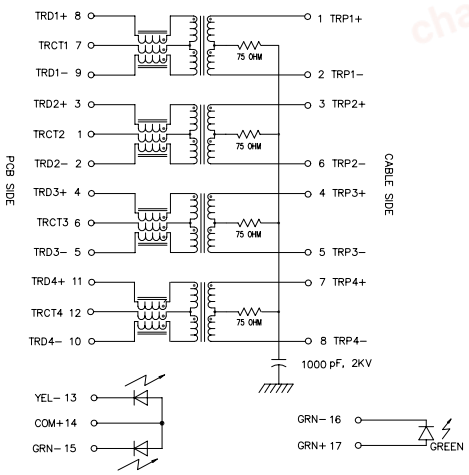

LED SPECIFICATIONS

EMMITTED COLOR	GREEN	YELLOW	GREEN
WAVELENGTH (nM)	570	586	565
POWER DISSIPATION (Pd)	85 mW MAX	85 mW MAX	85 mW MAX
DC FORWARD CURRENT	30 mA MAX	30 mA MAX	30 mA MAX
FORWARD VOLTAGE (VF) @20mA	1.8 V TYP	1.8 V TYP	1.8 V TYP

BICOLOR

For More Information:

Americas - prodinfonetworkamericas@yageo.com | **Europe -** prodinfonetworkemea@yageo.com | **Asia -** prodinfonetworkapac@yageo.com

Performance warranty of products offered on this data sheet is limited to the parameters specified. Data is subject to change without notice. Other brand and product names mentioned herein may be trademarks or registered trademarks of their respective owners. © Copyright, 2022. Pulse Electronics, Inc. All rights reserved.