chanhvinh.com

PulseJack™ -Single port Ethernet over stacked 2x1 USB

Pulse
a YAGEO company

Description:

RJ45/Dual USB Combo is a Through Hole (THT) Integrated Connector Module with a single RJ45 in combination with 2xUSB ports. The internal magnetics are designed to support 10/100 and 1000Base-TX applications such as LAN-on-Motherboard (LOM) and PC applications.



Features and Benefits:

- *RJ45 connection meets CAT 6 standards*
- *USB module complies with USB 2.0/3.0 standards*
- *RoHS peak wave solder temperature rating 260°C*

Electrical Performance Summary:

- *Meets IEEE 802.3u/ab.af specification*
- *High performance for maximum EMI suppression*
- *Minimum 1500Vrms isolation per IEEE 802.3 requirement*

Electrical Specifications @ 25°C - Operating Temperature 0°C to +70°C

RoHS Compliant Part Number	Data Rate	Turn Ratio	USB Style	LEDs	Insertion Loss TX/RX (dB MAX)	Return Loss @ 100Ω ±15Ω (dB TYP)			Cross talk (dB MIN)			Common Mode Rejection (dB TYP)		Hipot (Vrms) (MIN)
				L/R[1]	1-65 MHz	1-10 MHz	30 MHz	60-80 MHz	1-10 MHz	32-60 MHz	60-100 MHz	1-50 MHz	50-130 MHz	@60Hz 1 MIN
JXD4-4001NL[3]	10/100 (PoE)	1CT:1	USB2.0	G/Y	-1.0	-20	-16	-12	-40	-35	-30	-30	-20	1500
JD4-4003NL	10/100 (AutoMDIX)	1CT:1	USB2.0	G-0/Y	-1.0	-20	-16	-12	-40	-35	-30	-30	-20	1500
JW0-0009NL	10/100 (5 core)	1CT:1	USB2.0	G/Y[2]	-1.0	-20	-16	-12	-40	-35	-30	-30	-20	1500
JW0-0006NL	10/100/1000	1CT:1	USB2.0	G/G-Y[2]	-1.0	-20	-16	-12	-40	-35	-30	-30	-20	1500
JW0-0013NL	10/100/1000	1CT:1	USB2.0	G-0/Y	-1.0	-20	-16	-12	-40	-35	-30	-30	-20	1500
JD4-0012NL	10/100/1000	1CT:1	USB3.0	Y/G-0	-1.0	-20	-16	-12	-40	-35	-30	-30	-20	1500

Notes:

1. LEDs Left/Right: G = green; Y = yellow; 0 = Orange
2. G = Green with 250Ω internal resistor; Y = Yellow with 250Ω internal
3. Operating Temperature = 40°C to +85°C

RJ45 Durability Testing Rating

Part Number	Mating Force (MAX)	Unmating Force (MAX)	Durability	Plug to Jack Retention (MIN)
JW0/JD4/JXD4 Series	5 lbs./2.268 kgs.	5 lbs./2.268 kgs.	500 Insertions	20 lbs./9.072 kgs.

RJ45 Material Specification

Part Number	Shield		Contact			Housing		MSL[2] Rating
	Material	Finish	Material	Plating Area	Solder Area[3]	Material	Specification	
JW0/JD4/JXD4 Series	Brass	20-40µ inches thick Nickel over brass	Phosphor Bronze	15µ inches gold over 30-80µ inches nickel	75-300µinches tin-lead over 75-300µinches bright nickel	Thermoplastic	UL 94 V-0	1

Notes:

1. Connector dimensions comply with FCC dimension requirements
2. MSL = Moisture Sensitivity Level
3. NL parts are tin matte finish over nickel

chanhvinh.com

Mechanical

JD4-4003NL

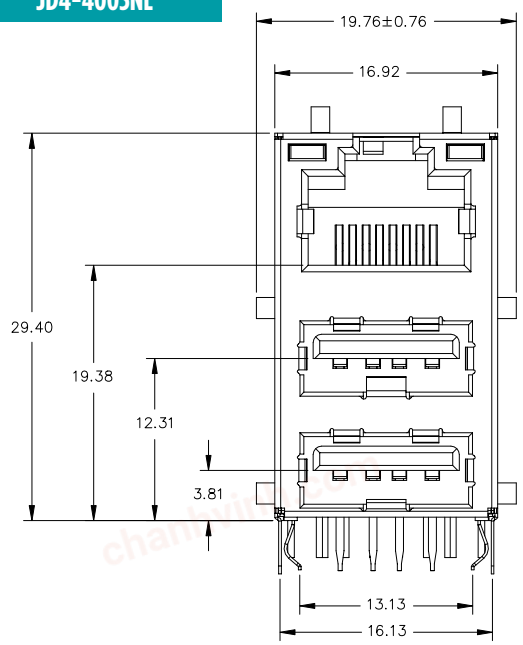

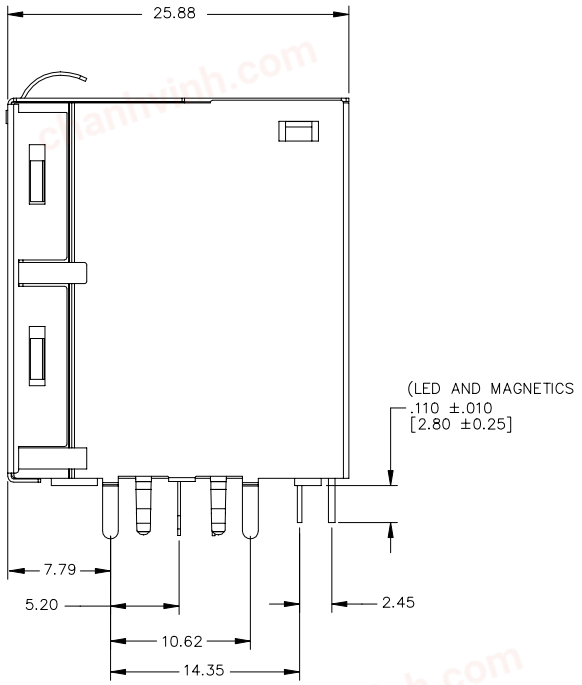

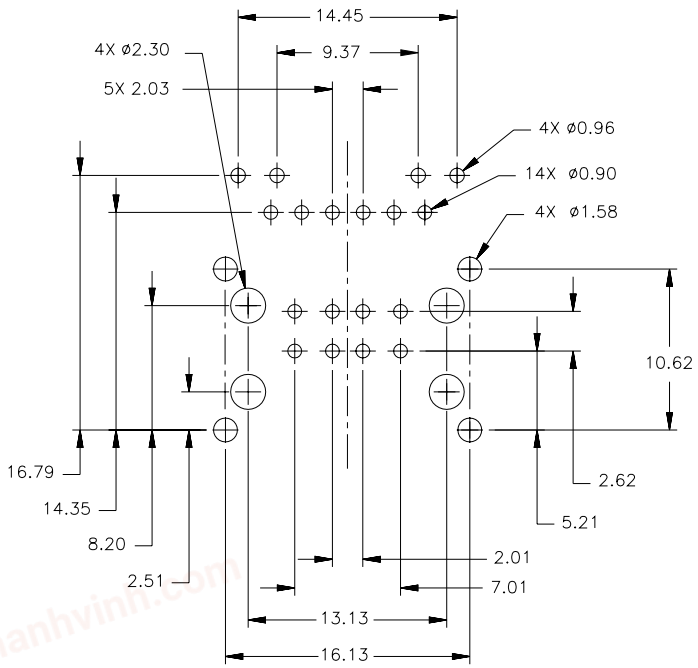

SUGGESTED FOOTPRINT (SHOWN FROM COMPONENT SIDE)
DIMENSIONAL TOLERANCE: [METRIC]
[X.XX ±0.08]

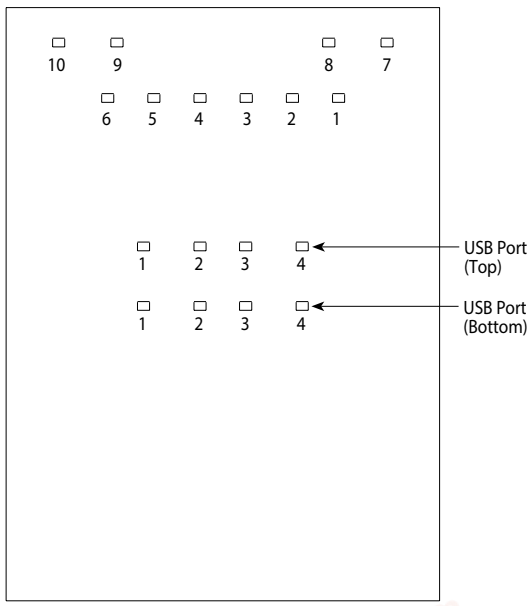

PIN CONFIGURATION (SHOWN FROM COMPONENT SIDE)

Weight . . . . . .8.1 grams
Tray 25/tray

Dimensions: mm

Unless otherwise specified,
all tolerances are ± 0,25

chanhvinh.com

Mechanical

JXD4-4001NL

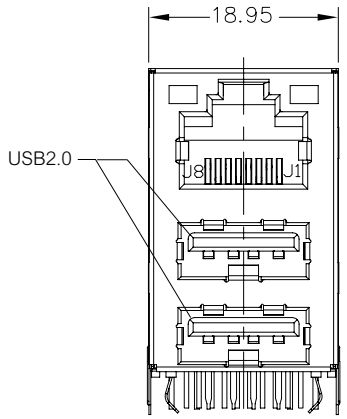

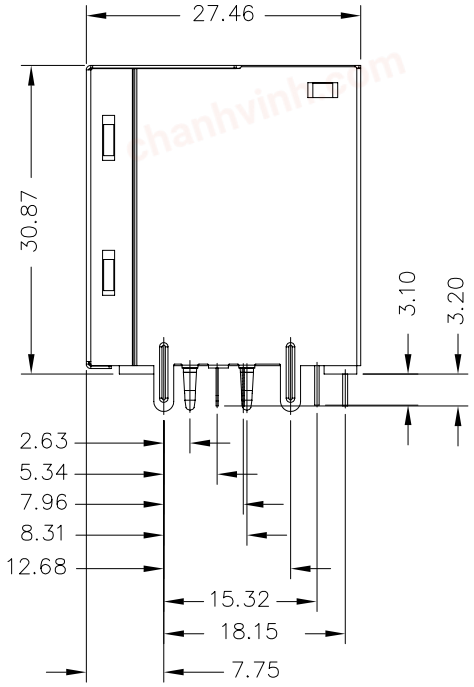

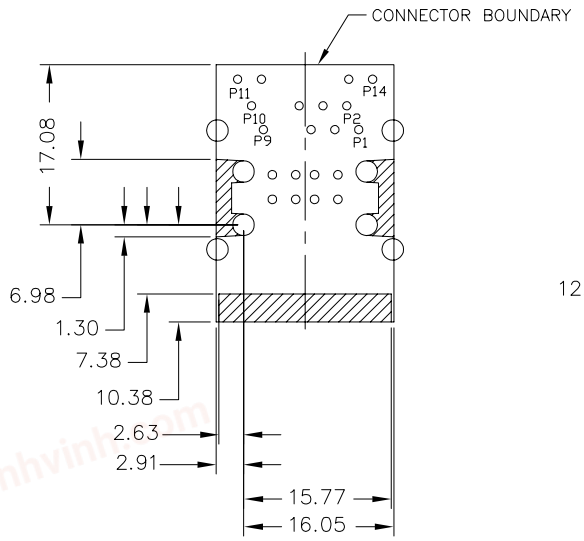

KEEP–OUT AREA
(COMPONENT SIDE VIEW)

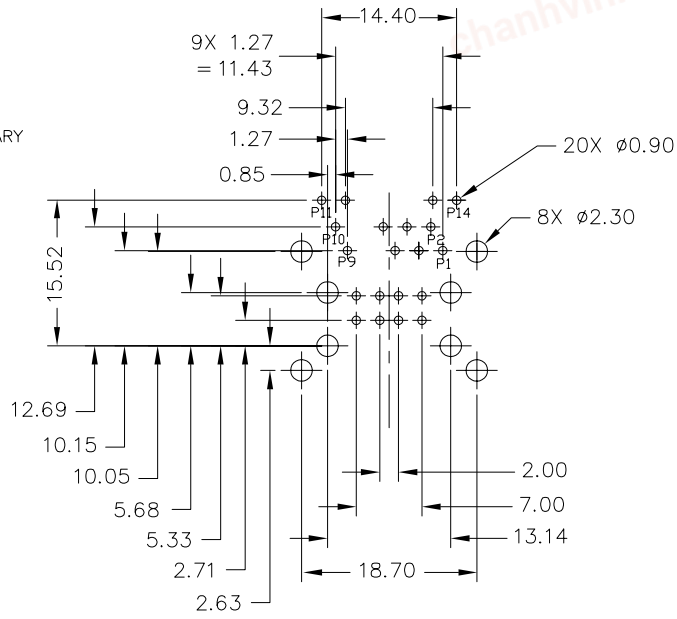

RECOMMENDED PCB LAYOUT
(COMPONENT SIDE VIEW)

Weight . . . . . 8.1 grams
Tray 25/tray

Dimensions: mm

Unless otherwise specified,
all tolerances are ± 0,25

chanhvinh.com

Pulse
a YAGEO company

Mechanical

JXD4-4012NL

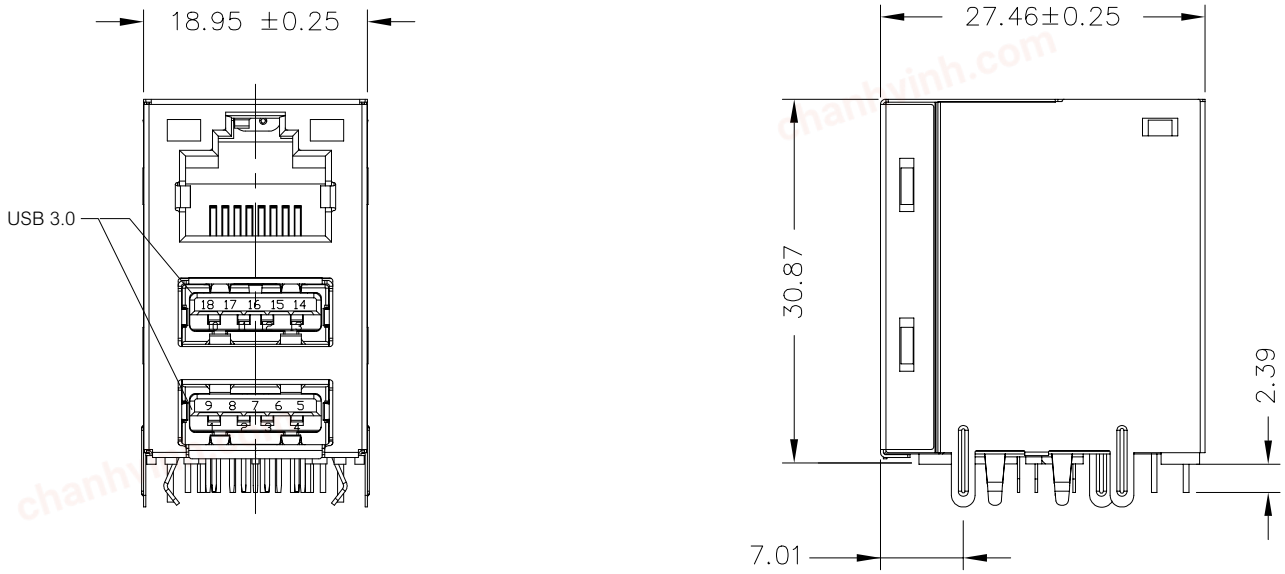

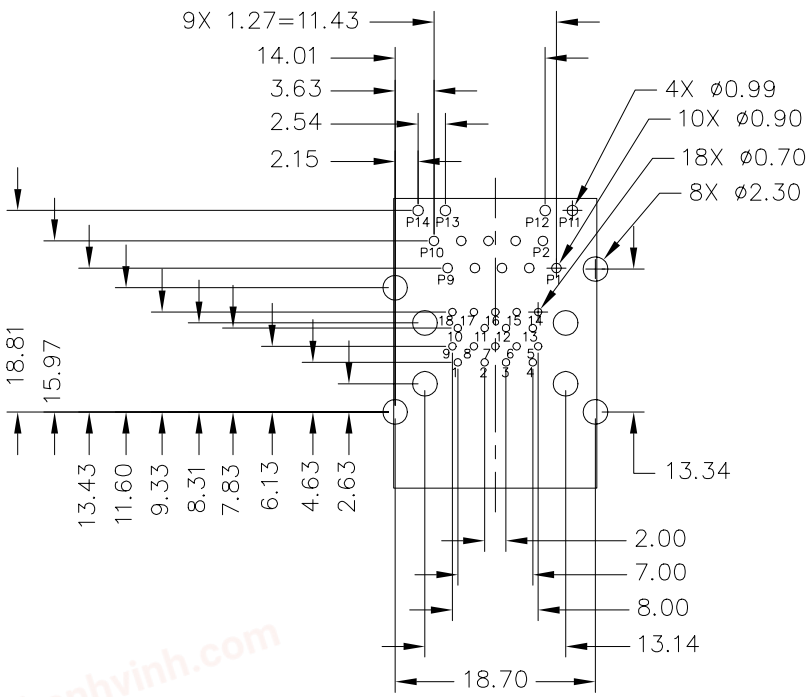

RECOMMENDED PCB LAYOUT
(COMPONENT SIDE VIEW)

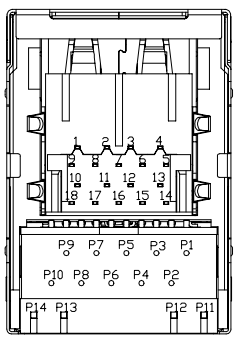

Weight . . . . . .8.1 grams
Tray 25/tray

Dimensions: mm

Unless otherwise specified,
all tolerances are ± 0,25

chanhvinh.com

Mechanical

JW0-0006NL, JW0-0009NL, JW0-0013NL

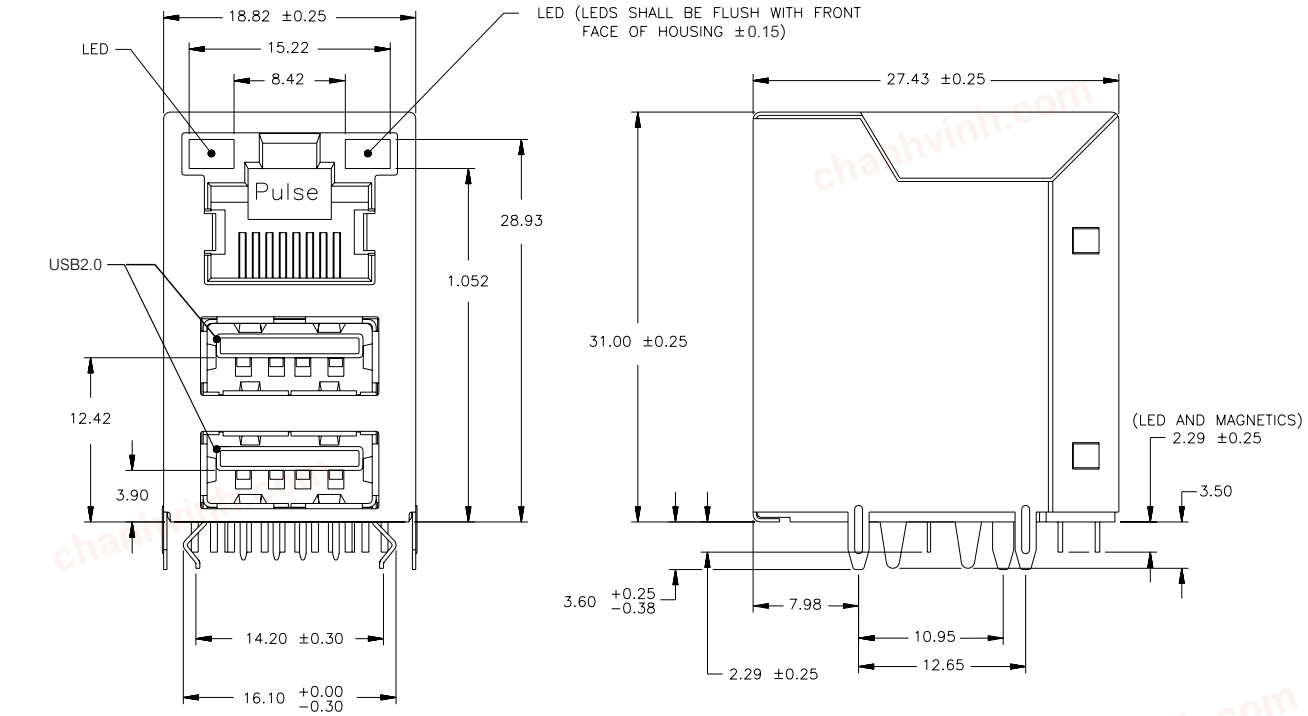

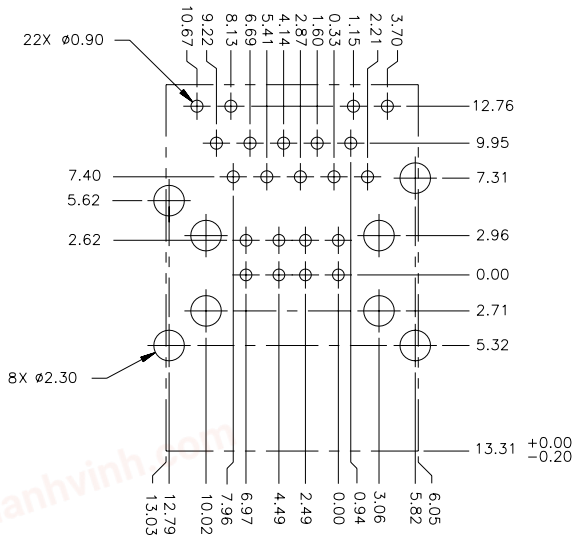

SUGGESTED FOOTPRINT (SHOWN FROM COMPONENT SIDE)

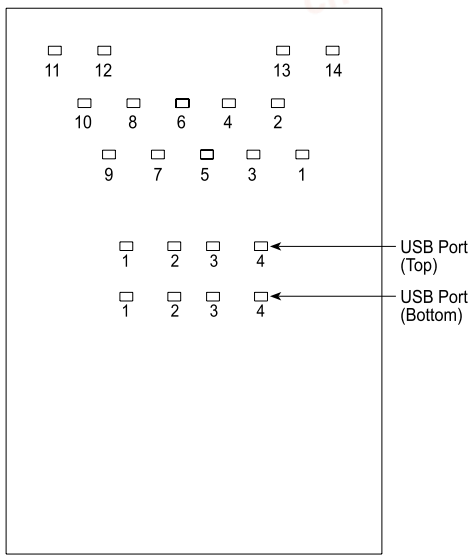

PIN CONFIGURATION (SHOWN FROM COMPONENT SIDE)

Weight . . . . . .8.1 grams
Tray 25/tray

Dimensions: mm

Unless otherwise specified, all tolerances are ± 0,25

chanhvinh.com

Schematic

JD4-4003NL

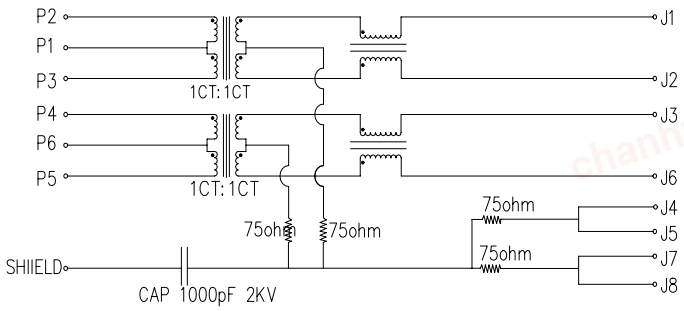

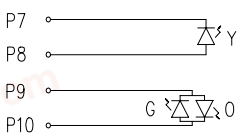

LED SPECIFICATION:

LED SPECIFICATION			
STANDARD LED	WAVELENGTH	FORWARD V(MAX)	TYP
GREEN	565nm	2.4V	2.2V
YELLOW	590nm	2.5V	2.1V
ORANGE	605nm	2.5V	2.0V

*WITH A FORWARD CURRENT OF 20mA

JXD4-4001NL

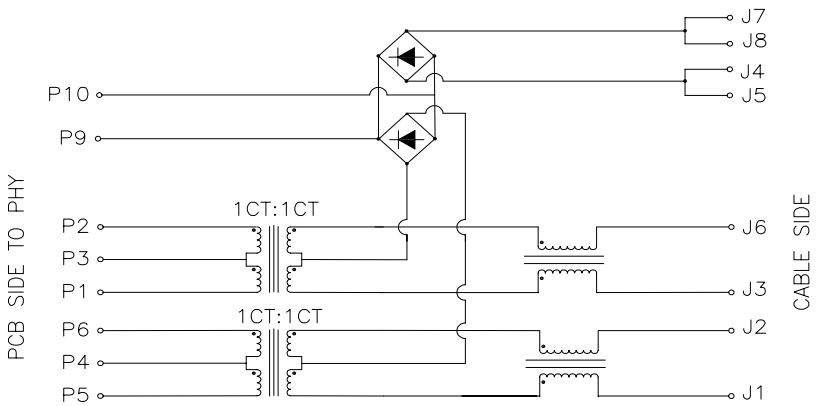

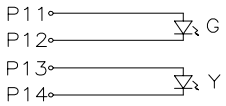

LED SPECIFICATION:

LED SPECIFICATION			
STANDARD LED	WAVELENGTH	FORWARD V(MAX)	TYP
GREEN	565nm	2.4V	2.2V
YELLOW	590nm	2.5V	2.1V

*WITH A FORWARD CURRENT OF 20mA

chanhvinh.com

Schematic

JW0-0009NL

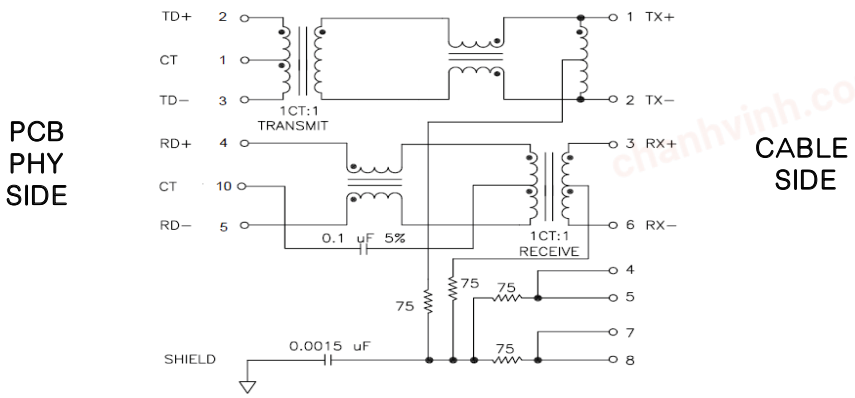

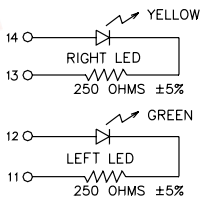

EMMITTED COLOR	GREEN	YELLOW
WAVELENGTH (nm)	568 nM	585 nM
BRIGTHNESS (mCD)	12 TYP. AT 20 mA	10 TYP. AT 20 mA
VIEWING ANGLE	100°	100°
POWER DISSIPATION (Pd)	68 mW MAX	68 mW MAX
DC FORWARD CURRENT	150 mA MAX	150 mA MAX
REVERSE VOLTAGE (Vr)	5.0 V MAX	5.0 V MAX
FORWARD VOLTAGE (Vf)	2.2 TO 2.7 VOLTS	2.1 TO 2.7 VOLTS

JXD4-4012NL

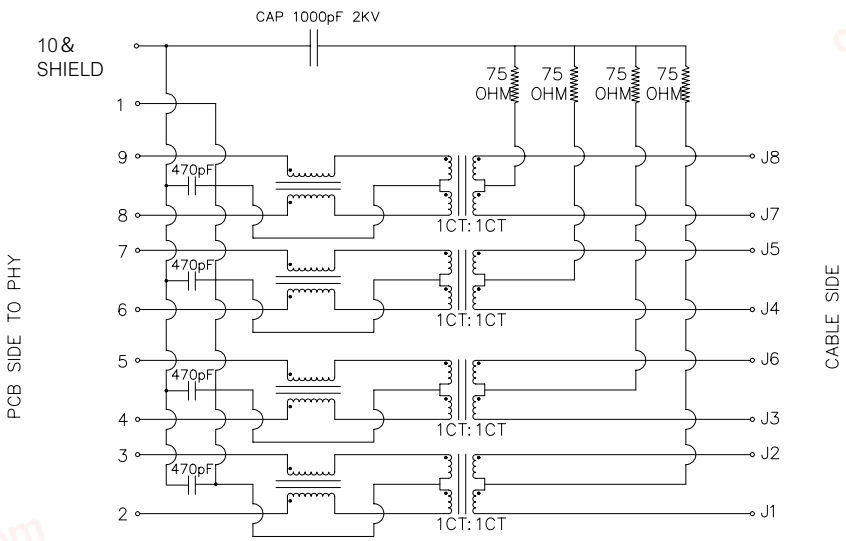

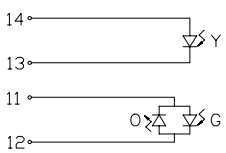

LED SPECIFICATION:

LED SPECIFICATION			
STANDARD LED	WAVELENGTH	FORWARD V(MAX)	TYP
GREEN	565nm	2.4V	2.2V
YELLOW	590nm	2.5V	2.1V
ORANGE	605nm	2.5V	2.0V

*WITH A FORWARD CURRENT OF 20mA

chanhvinh.com

Pulse
a YAGEO company

Schematic

JW0-0006NL

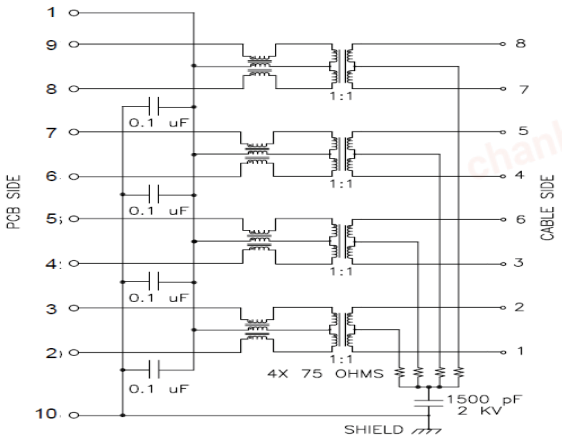

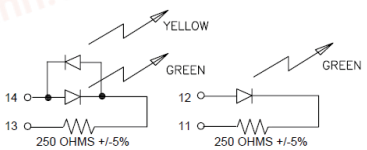

EMMITTED COLOR	GREEN	YELLOW	GREEN
WAVELENGTH (nm)	568 nM	585 nM	568 nM
BRIGTHNESS (mCD)	8.5 TYP. AT 20 mA	6 TYP. AT 20 mA	8 TO 12 TYP. AT 20 mA
VIEWING ANGLE	100°	100°	100°
POWER DISSIPATION (Pd)	100 mW MAX	100 mW MAX	68 mW MAX
DC FORWARD CURRENT	150 mA MAX	150 mA MAX	150 mA MAX
REVERSE VOLTAGE (Vr)	5.0 V MAX	5.0 V MAX	5.0 V MAX
FORWARD VOLTAGE (Vf)	2.2 TO 2.6 VOLTS	2.1 TO 2.6 VOLTS	2.2 TO 2.7 VOLTS

BI-COLOR

JW0-0013NL

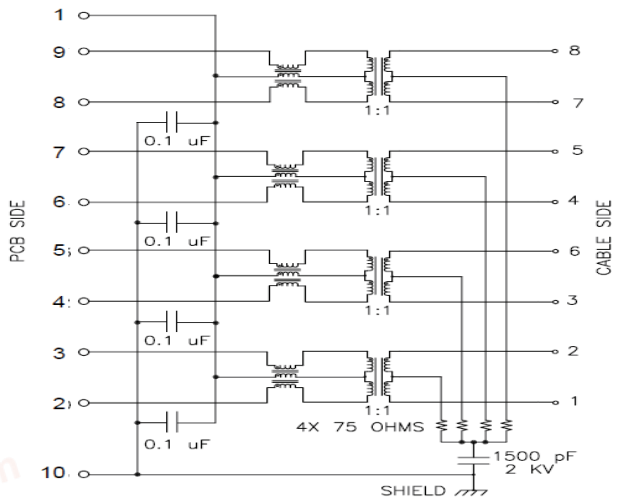

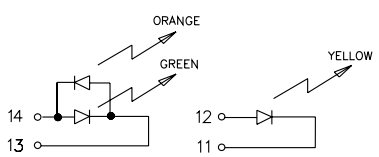

EMMITTED COLOR	GREEN	ORANGE	YELLOW
WAVELENGTH (nm)	568 nM	610 nM	585 nM
BRIGTHNESS (mCD)	8.5 TYP. AT 20 mA	6 TYP. AT 20 mA	10 TYP. AT 20 mA
VIEWING ANGLE	100°	100°	100°
POWER DISSIPATION (Pd)	100 mW MAX	80 mW MAX	68 mW MAX
DC FORWARD CURRENT	150 mA MAX	150 mA MAX	150 mA MAX
REVERSE VOLTAGE (Vr)	5.0 V MAX	5.0 V MAX	5.0 V MAX
FORWARD VOLTAGE (Vf)	2.2 TO 2.6 VOLTS	2.2 TO 2.6 VOLTS	2.1 TO 2.7 VOLTS

BI-COLOR

chanhvinh.com

PulseJack™ -Single port Ethernet over stacked 2x1 USB

USB/RJ45 Application Note

This line of Integrated Connector Modules are specifically designed for the implementation of a 10Base-T, 100Base-TX and 1000Base-TX transmission over data-grade unshielded twisted pair cable (UTP-3, 5/5e).

The connectors provide excellent EMI filtering and are suitable for Desktop PC, Embedded Systems and Multiport Applications. Pulse has worked closely with the leading IC manufacturers in providing these 10/100/1000 solutions, thereby assuring compatibility with each transceiver.
JW0, JD4 and JXD4 series meet the stringent open circuit inductance requirements of IEEE. When an 8mA DC current is applied across the transformer windings, the transformer will provide at least 350µH. The transformers used in each module also provide 1500Vrms minimum isolation, wide bandwidth with minimal attenuation and fast rise times to minimise system level jitter.

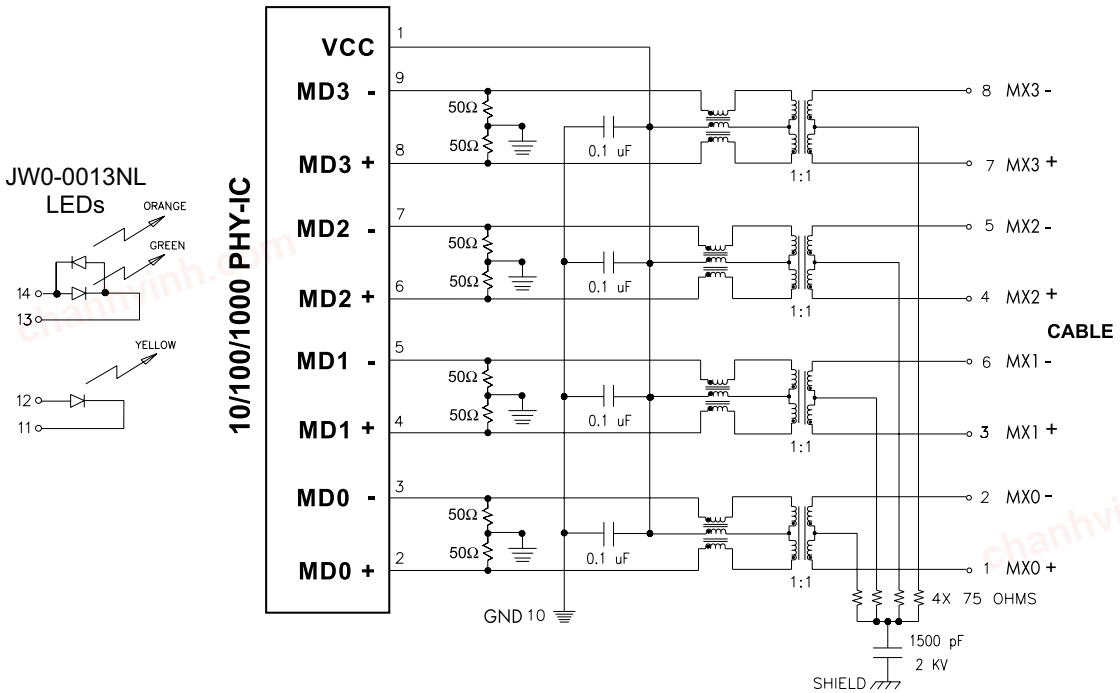

PCB Layout Recommendations:

1. For maximum EMI suppression (electromagnetic interference) place the decoupling capacitors adjacent to Vcc and 50W connections.
2. Connections to ground should be as short as possible.
3. Connections between the 10/100/1000 IC and the connector should be direct (ideally no change in direction) and of minimum length.

For More Information:
Americas - prodinfo_network_americas@yageo.com | **Europe -** prodinfo_network_emea@yageo.com | **Asia -** prodinfo_network_asia@yageo.com

Performance warranty of products offered on this data sheet is limited to the parameters specified. Data is subject to change without notice. Other brand and product names mentioned herein may be trademarks or registered trademarks of their respective owners. © Copyright, 2023. Pulse Electronics, Inc. All rights reserved.