chanhvinh.com

Reinforced Halogen Free ESS Transformer

UL approved design for residential and commercial Battery Storage Solutions

Pulse
a YAGEO company



Features and Benefits:

- *Supports leading vendors silicon for battery (BMS) and energy storage solutions (ESS).*
- *UL Compliance to IEC/UL62368-1 for Reinforced*
- *Selection of Working and Breakdown Voltages*
- *Wide temperature performance from -40 to +125°C*
- *Automated Winding and Production Process for high reliability*

Applications:

- *Energy Storage (ESS), marine or aviation transportation.*

Operating Temperature - see Table Below								
Part Number	Inductance (100kHz, 100mVrms)	Turns Ratio	Choke fitted	Isolation breakdown (Pri:Sec)	Working Voltage	Insulation Clearance (mm)	Insulation Creepage (mm)	Insulation Resistance (MegaOhms)
HXE2006HL	150 uH min	1.00 +/- 2%	YES	4300Vrms / 60sec	500VDC	>6.35mm	>6.35mm	400
HXE2007HL	150 uH min	1.00 +/- 2%	YES	4300Vrms / 60sec	800VDC	>6.35mm	>8.00mm	400
HXE2008HL	150 uH min	1.00 +/- 2%	YES	4300Vrms / 60sec	1000VDC	>6.35mm	>10.0mm	400
HXE2009HL	150 uH min	1.00 +/- 1%	YES	4300Vrms / 60sec	1500VDC	>6.35mm	>15.0mm	400
HXE2010HL	150 uH min	1.00 +/- 2%	YES	5000Vrms / 60sec	500VDC	>8.0mm	>8.00mm	400
HXE2011HL	150 uH min	1.00 +/- 2%	YES	5000Vrms / 60sec	800VDC	>8.0mm	>8.00mm	400
HXE2012HL	150 uH min	1.00 +/- 2%	YES	5000Vrms / 60sec	1000VDC	>8.0mm	>10.0mm	400
HXE2013HL	150 uH min	1.00 +/- 2%	YES	5000Vrms / 60sec	1500VDC	>8.0mm	>15.0mm	400
HXE2014HL	150 uH min	1.00 +/- 2%	YES	6000Vrms / 60sec	500VDC	>8.0mm	>8.00mm	400
HXE2015HL	150 uH min	1.00 +/- 2%	YES	6000Vrms / 60sec	800VDC	>8.0mm	>8.00mm	400
HXE2016HL	150 uH min	1.00 +/- 2%	YES	6000Vrms / 60sec	1000VDC	>8.0mm	>10.0mm	400
HXE2017HL	150 uH min	1.00 +/- 2%	YES	6000Vrms / 60sec	1500VDC	>8.0mm	>15.0mm	400

Additional Electrical performance

Electrical (Cont...)							
Part Number	Leakage Inductance (Max)	Winding DCR (Ω)		Insertion Loss	Return Loss	CMRR	
		PHY Side	Line Side		|Z|out = 100 Ω	1 - 10MHz	10- 1000MHz
HXE20xxHL	1.0 uH @ 100kHz	0.80 max	1.00 max	-0.50dB max @ 4MHz	-20 dB min @ 4MHz	-35dB	-20dB

Notes:

1. Storage Temperature: -50°C to +125°C
2. Compliance to J-STD:
   A. J-STD-002: Solderability at 245°C Reflow Profile
   B. J-STD-020: Moisture Sensitive Level 1
   C. J-STD-075: R7, 245°C Maximum Through Reflow Solder
3. The HL suffix part comes in Tubes with 40pcs per tube. To order tape and reel packaging add a 'T' suffix to the part number (ie: HXE2006HL becomes HXE2006HLT). Quantity per reel is 250pcs/reel.
4. Header: DAP (Diallyl Phthalate) with flammability Rating UL 94V-0 or better
5. Lead Frame: Cooper Alloy
   Under plated: Half Hard Ductile Nickel 50-100" (1.3-2.5um)
   Over plated : 100% Tin electro-deposited per ASTM B545 300 - 50u"(8-13um)
   Finish : Matte finish 100% Tin solder

chanhvinh.com

Reinforced Halogen Free ESS Transformer

UL approved design for residential and commercial Battery Storage Solutions

Pulse a YAGEO company

MECHANICALS

HXE20xxHL

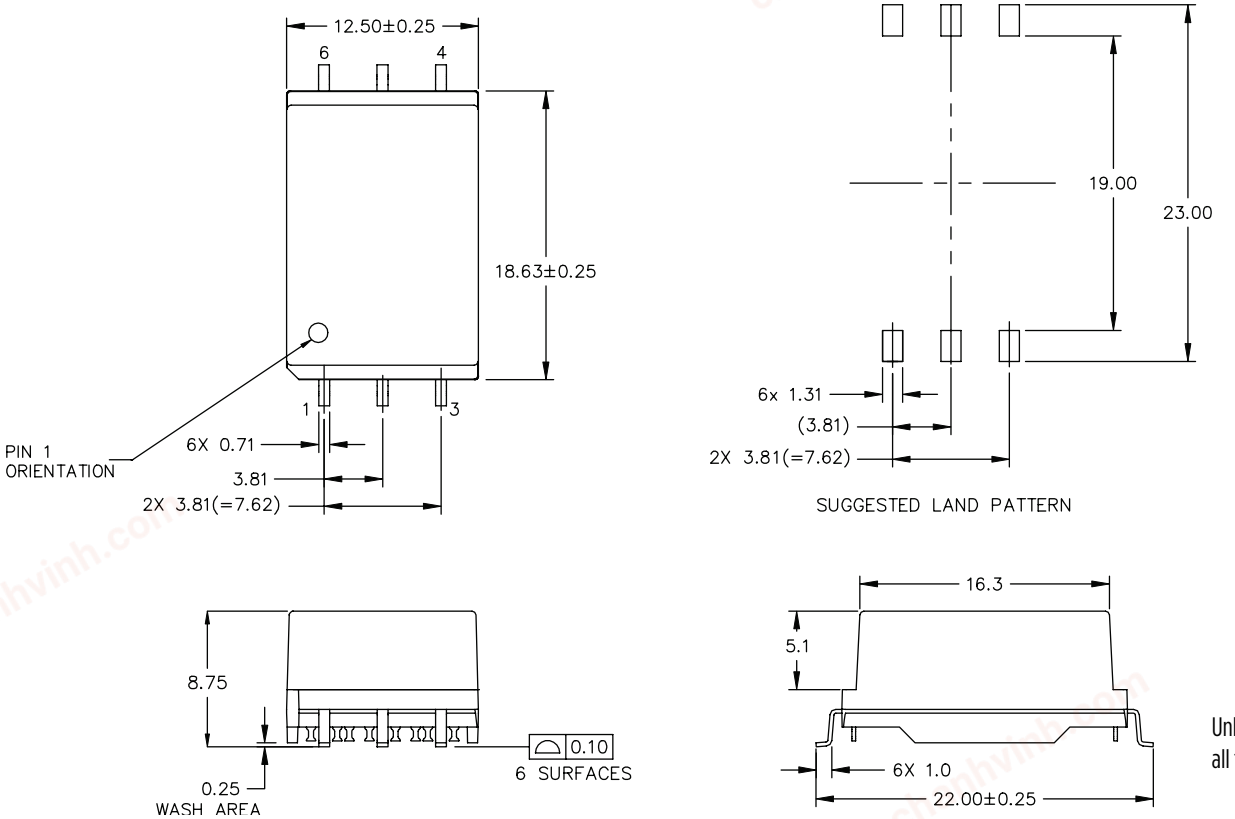

Dimensions:
Unless otherwise specified, all tolerances are ± 0,25

SCHEMATICS

HXE20xxHL

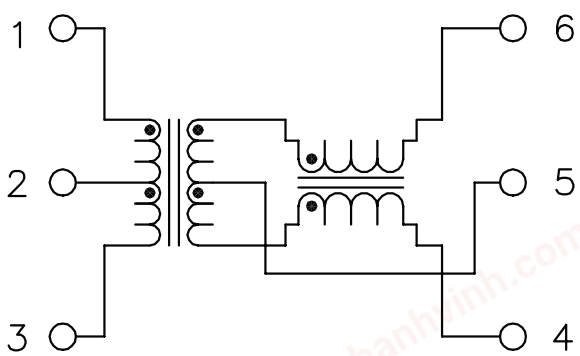

chanhvinh.com

Reinforced Halogen Free ESS Transformer

UL approved design for residential and commercial Battery Storage Solutions

TAPE & REEL

HXE20xxHL

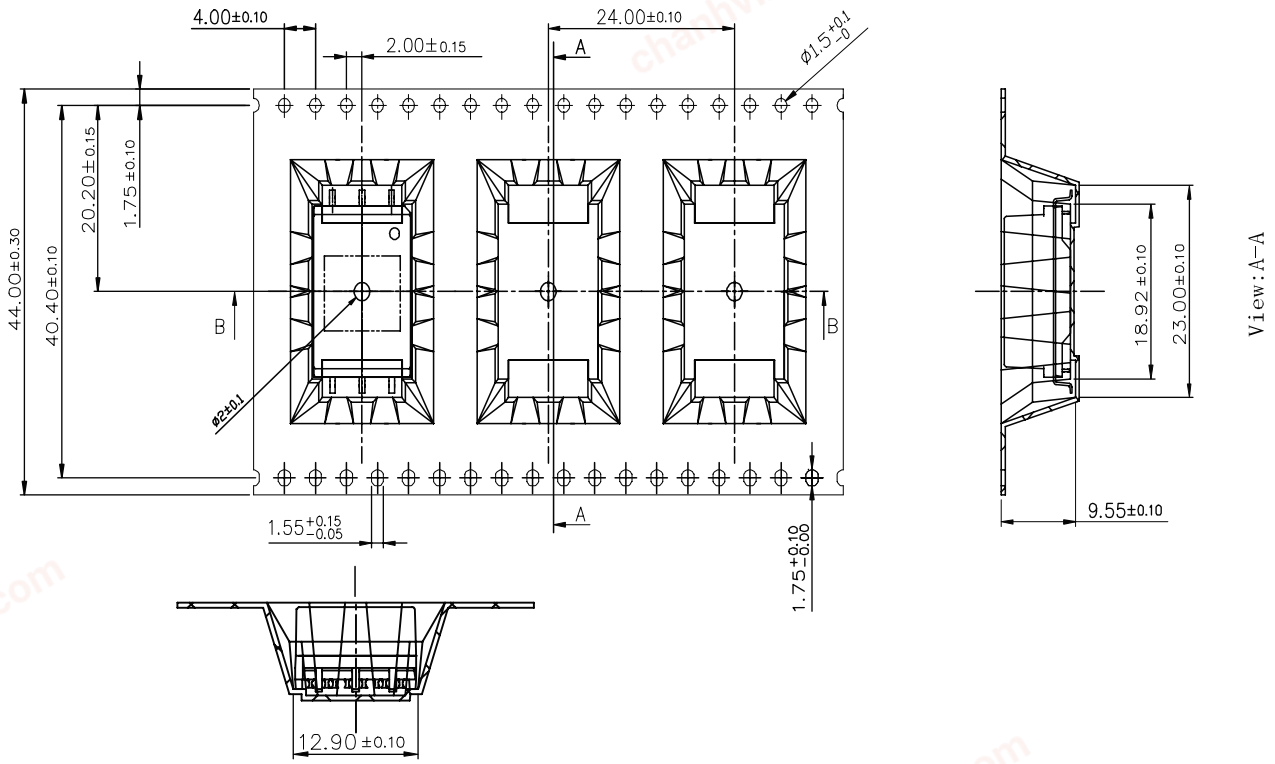

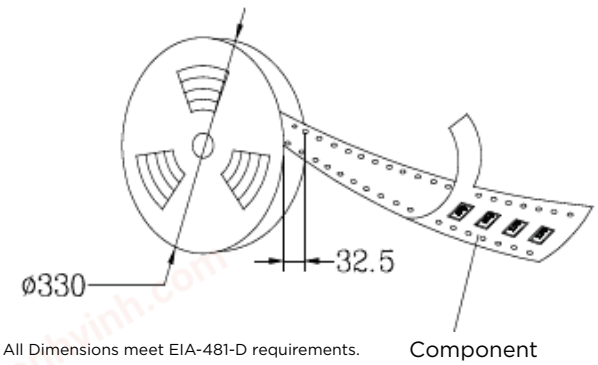

All Dimensions meet EIA-481-D requirements.

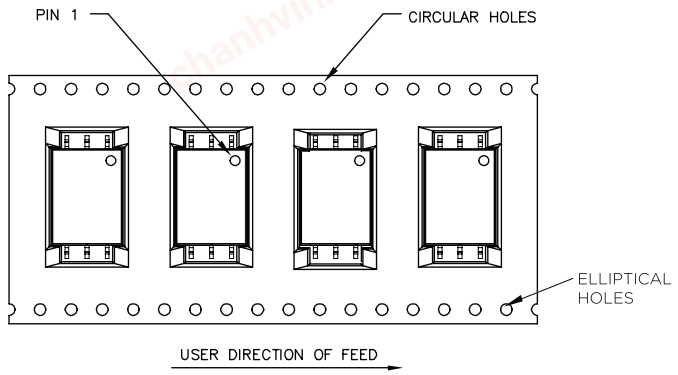

1. **Material:** Black Conductive Polystyrene
2. **Components per Reel:** 250 pieces
3. **Quantity per carton:** 4x full reels = 2000 pieces

For More Information:

Americas - prodinfo_network_americas@yageo.com | **Europe -** prodinfo_network_emea@yageo.com | **Asia -** prodinfo_network_apac@yageo.com

Performance warranty of products offered on this data sheet is limited to the parameters specified. Data is subject to change without notice. Other brand and product names mentioned herein may be trademarks or registered trademarks of their respective owners. © Copyright, 2023. Pulse Electronics, Inc. All rights reserved.