chanhvinh.com

Dual Port 1Gigabit SMD PoE Magnetic Modules

HB5013HLT, HB5014HLT, HB6010HLT, HB6011HLT, HB6012HLT, HXB6013HLT, HXB6014HLT, HXB6015HLT

Pulse a YAGEO company

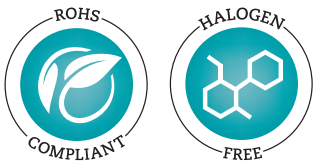

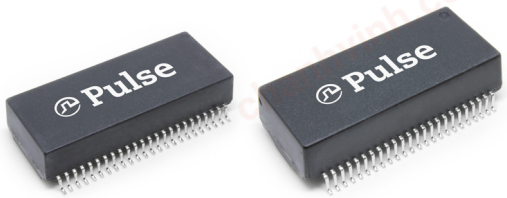

- *Fully RoHS and Halogen Free*
- *Dual Port with high Isolation and Surge options*
- *Supports up to 60Watt, 4pair Power over Ethernet*
- *Meet or exceed IEEE802.3 ab/af for 1000Base-T*
- *Compatible with all 1:1 turns ration PHYs*
- *Commercial and Industrial Temperature*
- *Reliable SMD packages support 245°C pk Reflow*
- *All components Supplied in Tape and Reel*

Electrical Specification @ 25°C (OCL@ 8mA DC)

Part Number	Media side Inductance (@100KHz/0.1Ve) uH min	Insertion Loss (dB max)	Return Loss (dB min)		PoE (Current Per Pair mA)	Operating Temperature (°C)	Isolation (Pri:Sec)	Note
		1-100 MHz	1-40MHz	40< f ≦ 100 MHz				
HB5013HLT	350	-1.0	-16	-(10-20 log10(f/80))	-	0° to 70°	3000Vrms	Surge CM 6KV
HB5014HLT	350	-1.0	-16	-(10-20 log10(f/80))	-	0° to 70°	4000Vrms	Surge CM 6KV
HB6010HLT	350	-1.0	-16	-(10-20 log10(f/80))	350	0 to 70°	1500Vrms	30W 4pair PoE+
HB6011HLT	350	-1.0	-16	-(10-20 log10(f/80))	350	0° to 70°	1500Vrms	30W 4pair PoE+
HB6012HLT	350	-1.0	-16	-(10-20 log10(f/80))	720	0° to 70°	1500Vrms	60W 4pair PoE+
HXB6013HLT	350	-1.0	-16	-(10-20 log10(f/80))	720	-40° to 85°	3000Vrms	60W PoE, Surge CM 6KV
HXB6014HLT	350	-1.0	-16	-(10-20 log10(f/80))	600	-40° to 85°	1500Vrms	60W 4pair PoE+

Note: ** Specifications listed above refer to the base component part number that is printed on the product - ie HXB6014HLT will be HXB6014HL*

Electrical Specification @ 25°C (OCL@ 15mA DC)

Part Number	Media side Inductance (@100KHz/0.1Ve) uH min	Insertion Loss (dB max)	Return Loss (dB min)		PoE (Current Per Pair mA)	Operating Temperature (°C)	Isolation (Pri:Sec)	Note
		1-100 MHz	1-40MHz	40< f ≦ 100 MHz				
HXB6015HLT	350	-1.4	-16	-(10-20 log10(f/80))	1000	-40° to 85°	1500Vrms	90W 4pair PoE+

Note: ** Specifications listed above refer to the base component part number that is printed on the product - ie HXB6015HLT will be HXB6015HL*

Process and Materials

Notes:

1. Storage Temperature:
   HBxxxxHL = -20 to +125°C
   HXBxxxxHL = -50 to +125°C
2. Compliance to JEDEC-J-STD 020:
   i. Moisture Sensitive Level 1
   ii. Maximum peak Reflow Solder temperature 245°C
3. All parts come in 13" (330mm) Diameter Tape and reel - see page 3 for details
4. Header: Black Thermoset Plastic - Material flammability rating UL 94V-0
5. Lead Frame: Cooper Alloy
6. Underplate / Overplate: Tin electro-deposited over Nickel
7. Finish: Matte finish Tin solder

chanhvinh.com

Dual Port 1Gigabit SMD PoE Magnetic Modules

HB5013HLT, HB5014HLT, HB6010HLT, HB6011HLT, HB6012HLT, HXB6013HLT, HXB6014HLT, HXB6015HLT

Pulse a YAGEO company

Mechanicals

HB5/601xHLT, HXB601xHLT

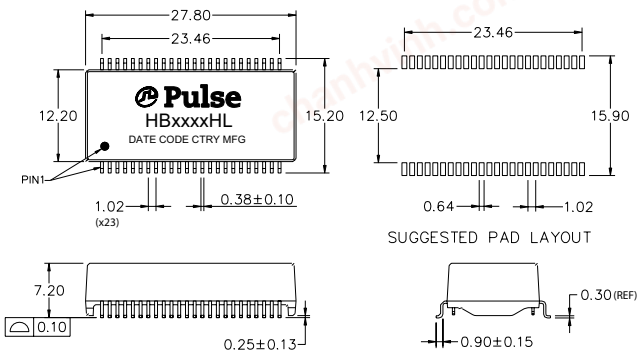

HXB6015HLT

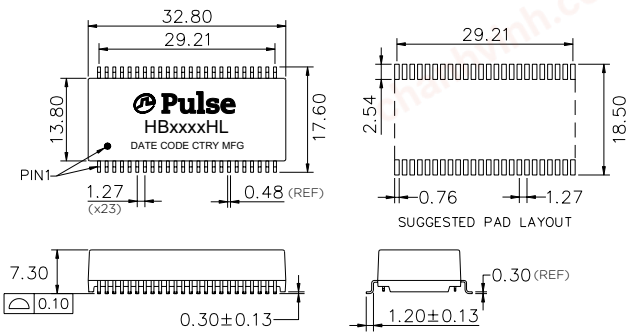

Dimensions: mm

Unless otherwise specified the following tolerances apply:
xx.xx = ±0.25
x.xx = ±025
0.xx = ±0.13

Schematics

HB5014HLT, HB6010HLT, HXB6014HLT, HXB6015HLT

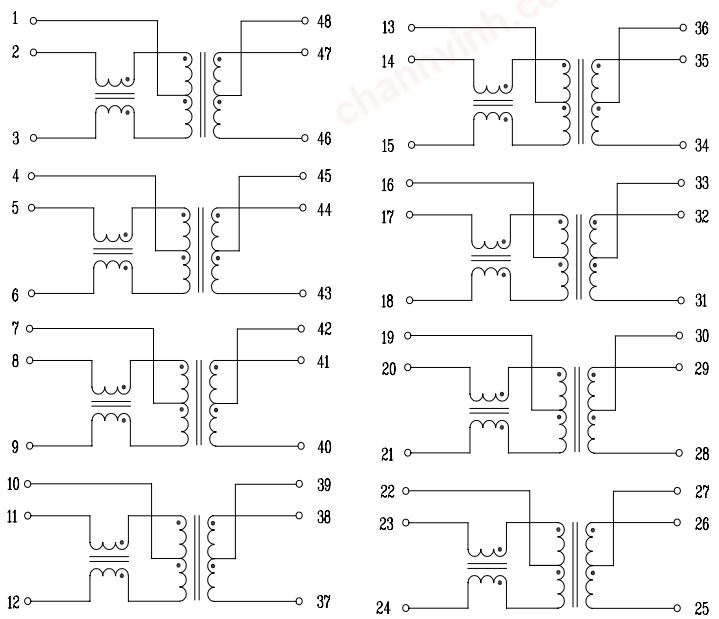

HB5013HLT, HB6011HLT, HB6012HLT, HXB6013HLT

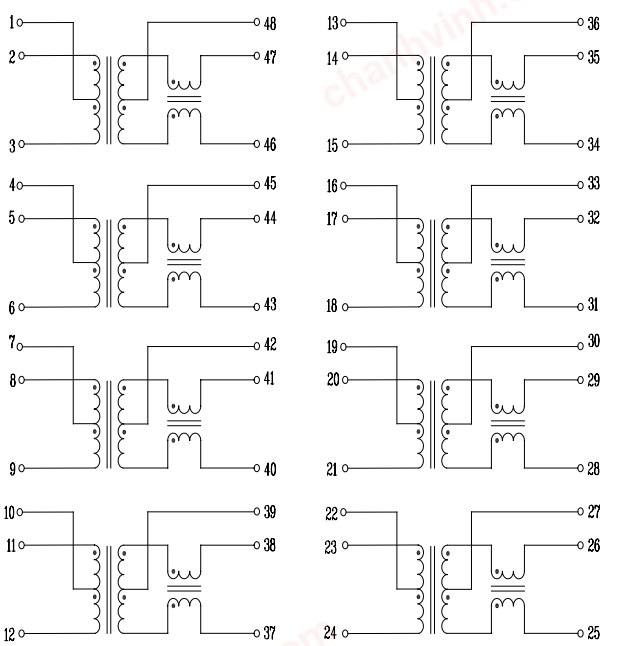

chanhvinh.com

Dual Port 1Gigabit SMD PoE Magnetic Modules

HB5013HLT, HB5014HLT, HB6010HLT, HB6011HLT, HB6012HLT, HXB6013HLT, HXB6014HLT, HXB6015HLT

Tape & Reel

HB501xHLT, HB601xHLT, HXB601xHLT

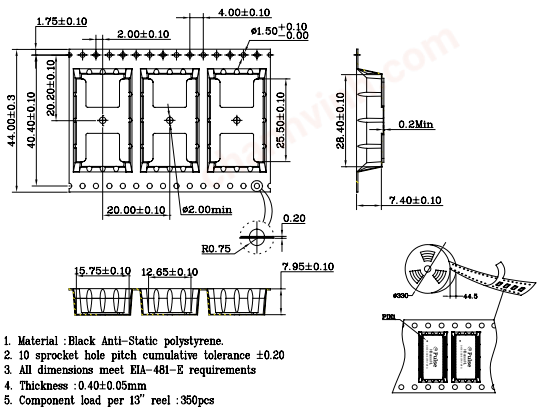

1. Material : Black Anti-Static polystyrene.
2. 10 sprocket hole pitch cumulative tolerance ±0.20
3. All dimensions meet EIA-481-E requirements
4. Thickness : 0.40±0.05mm
5. Component load per 13" reel : 350pcs

HXB6015HLT

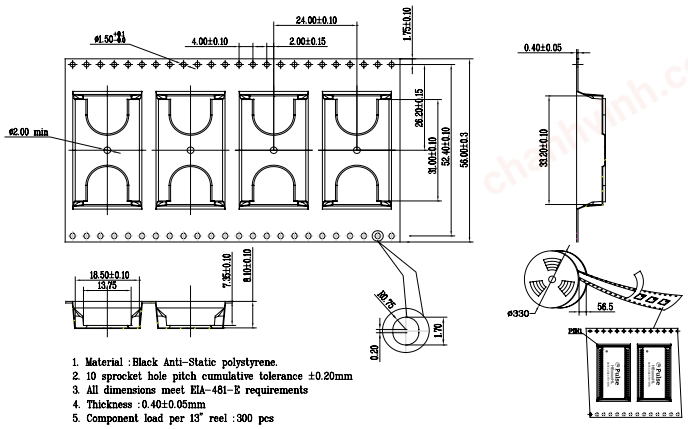

1. Material : Black Anti-Static polystyrene.
2. 10 sprocket hole pitch cumulative tolerance ±0.20mm
3. All dimensions meet EIA-481-E requirements
4. Thickness : 0.40±0.05mm
5. Component load per 13" reel : 300 pcs

Carton Package

HB501xHLT, HB601xHLT, HXB601xHLT

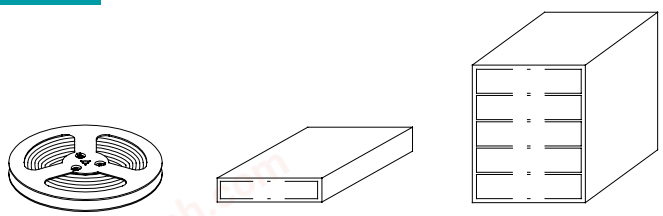

REEL INNER BOX 347x347x82 OUTER CARTON: 375x375x470

1. 1 REEL=350PCS
2. 1 INNER BOX=1 REEL=350PCS
3. 1 OUTER CARTON=5 INNER BOXES=1750PCS

HXB6015HLT

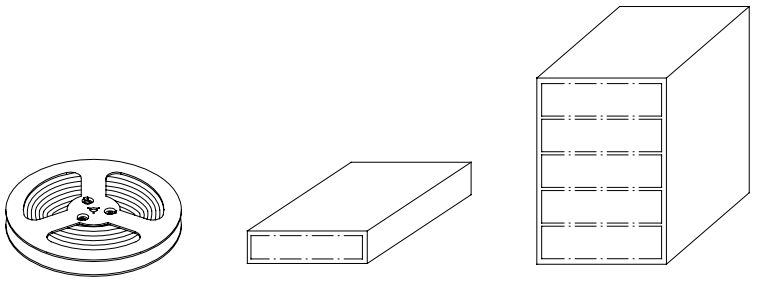

REEL INNER BOX: 347x347x82 OUTER CARTON: 375x375x470

1. 1 REEL=300PCS
2. 1 INNER BOX=1 REEL=300PCS
3. 1 OUTER CARTON=5 INNER BOXES=1500PCS

For More Information:

Americas - prodinfo_network_americas@yageo.com | **Europe -** prodinfo_network_emea@yageo.com | **Asia -** prodinfo_network_asia@yageo.com

Performance warranty of products offered on this data sheet is limited to the parameters specified. Data is subject to change without notice. Other brand and product names mentioned herein may be trademarks or registered trademarks of their respective owners. © Copyright, 2024. Pulse Electronics, Inc. All rights reserved.

YAGEO Corporation and its affiliates do not recommend the use of commercial or automotive grade products for high reliability applications or manned space flight.