chanhvinh.com

Single and Quad 100BASE–TX SMD Modules

HB3005HLT, HXB2001HLT, HXB2002HLT, HB3004HLT, HB2003HLT, HB3006HLT, HB3002HLT, HB3003HLT and HXB3006HLT

YAGEO GROUP PULSE

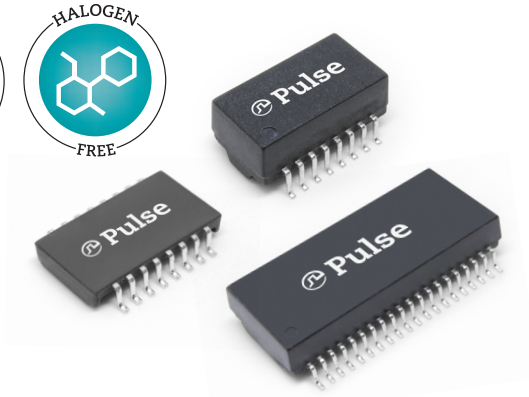

- *Fully RoHS and Halogen Free*
- *Single, Quad and Power over Ethernet options*
- *Meet or exceed IEEE802.3u/af/at for 10/100Base-TX*
- *Compatible with all 1:1 turns ration PHYs*
- *Supports AutoMDIX functionality*
- *Commercial and Industrial Temperature*
- *Reliable SMD packages support 245°C pk Reflow*
- *All components Supplied in Tape and Reel*

Electrical Specification @ 25°C (OCL@DC8mA)

Part Number	Media side Inductance (@100KHz/0.1Ve) uH min	Insertion Loss (dB max)	Return Loss (dB min)			PoE (Current Per Pair mA)	Operating Temperature (°C)	Isolation (Pri:Sec)	Note
		0.3-100 MHz	2-30MHz	30-60MHz	60-80MHz				
HB3005HLT	350	-1.15	-16	-(16-20log10(f/30))	-10	-	0 to +70	1500Vrms	-
HXB2001HLT	350	-1.15	-16	-(16-20log10(f/30))	-10	720	-40 to +85	1500Vrms	PoE+
HXB2002HLT	350	-1.15	-16	-(16-20log10(f/30))	-10	350	-40 to +85	1500Vrms	PoE
HB3004HLT	350	-1.15	-16	-(16-20log10(f/30))	-10	-	0 to +70	1500Vrms	-
HB2003HLT	350	-1.15	-16	-(16-20log10(f/30))	-10	720	0 to +70	1500Vrms	PoE+
HB3006HLT	350	-1.15	-16	-(16-20log10(f/30))	-10	-	0 to +70	1500Vrms	QUAD PORT
HXB3006HLT	350	-1.15	-16	-(16-20log10(f/30))	-10	-	-40 to +85	1500Vrms	QUAD PORT

Note: ** Specifications listed above refer to the base component part number that is printed on the product - ie HXB2002HLT will be HXB2002HL*

Electrical Specification @ 25°C

Part Number	Media side Inductance (@100KHz/0.1Ve) uH min	Insertion Loss (dB max)	Return Loss (dB min)			PoE (Current Per Pair mA)	Operating Temperature (°C)	Isolation (Pri:Sec)	Note
		0.3-100 MHz	2-30MHz	30-60MHz	60-80MHz				
HB3002HLT	350	-1.15	-16	-(16-20log10(f/30))	-10	-	0 to +70	1500Vrms	PCMCIA
HB3003HLT	350	-1.15	-16	-(16-20log10(f/30))	-10	-	0 to +70	1500Vrms	PCMCIA

Note: ** Specifications listed above refer to the base component part number that is printed on the product - ie HB3002HLT will be HB3002HL*

Process and Materials

Notes:

1. Storage Temperature:
   HBxxxxHL = -20 to +125°C
   HXBxxxxHL = -50 to +125°C
2. Compliance to JEDEC-J-STD 020:
   i. Moisture Sensitive Level 1
   ii. Maximum peak Reflow Solder temperature 245°C
3. All parts come in 13" (330mm) Diameter Tape and reel - see page 4-5 for details
4. Header: Black Thermoset Plastic - Material flammability rating UL 94V-0
5. Lead Frame: Cooper Alloy
6. Underplate / Overplate: Tin electro-deposited over Nickel
7. Finish: Matte finish Tin solder

chanhvinh.com

Single and Quad 100BASE–TX SMD Modules

HB3005HLT, HXB2001HLT, HXB2002HLT, HB3004HLT, HB2003HLT, HB3006HLT, HB3002HLT, HB3003HLT and HXB3006HLT

Mechanicals

HB2003HLT, HB3004/5HLT, HXB2001/2HLT

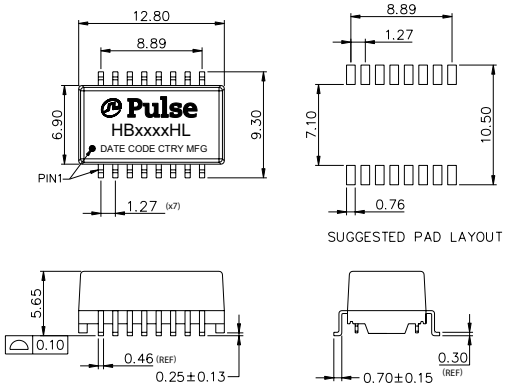

Dimensions: mm

Unless otherwise specified the following tolerances apply:
xx.xx = ±0.25
x.xx = ±025
0.xx = ±0.13

HB3002HLT, HB3003HLT

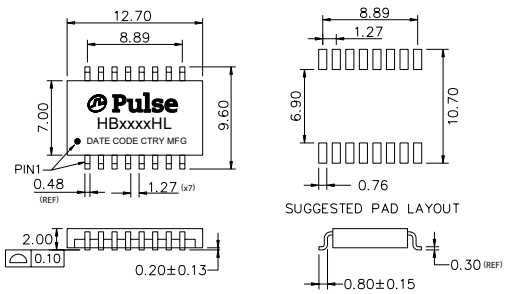

HB3006HLT, HXB3006HLT

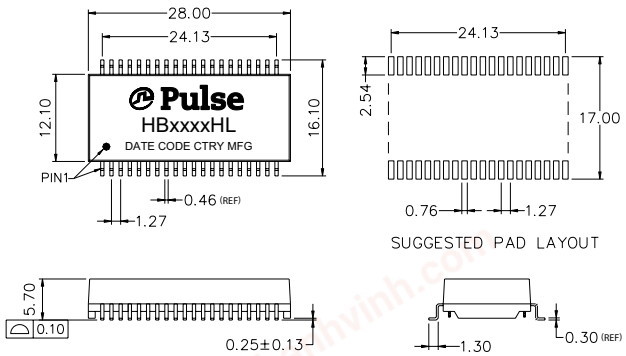

Dimensions: mm

Unless otherwise specified the following tolerances apply:
xx.xx = ±0.25
x.xx = ±025
0.xx = ±0.13

Schematics

HB2003HLT

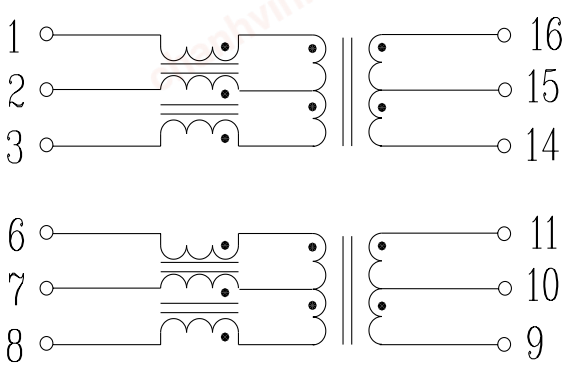

HB3004HLT, HXB2002HLT

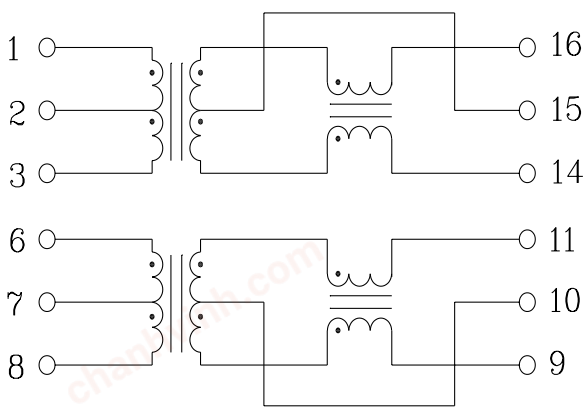

chanhvinh.com

Single and Quad 100BASE–TX SMD Modules

HB3005HLT, HXB2001HLT, HXB2002HLT, HB3004HLT, HB2003HLT, HB3006HLT, HB3002HLT, HB3003HLT and HXB3006HLT

Schematics

HB3005HLT, HXB2001HLT

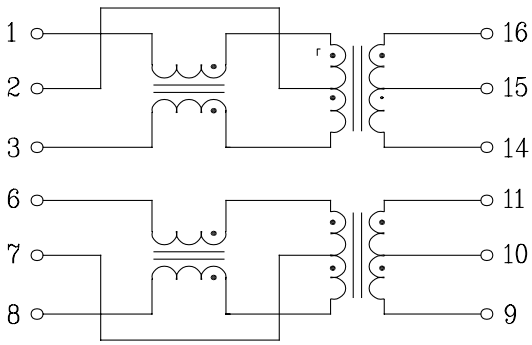

HB3003HLT

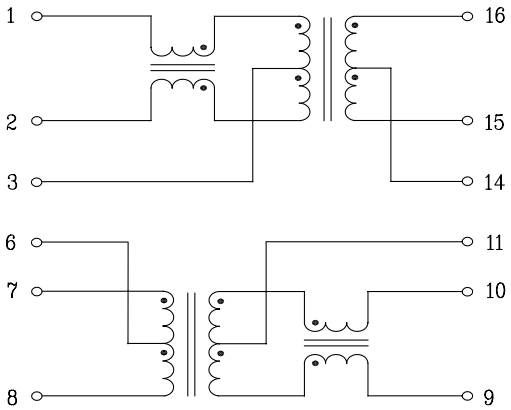

HB3002HLT

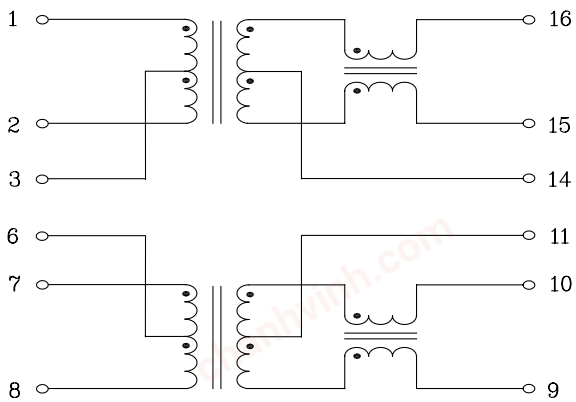

HB3006HLT, HXB3006HLT

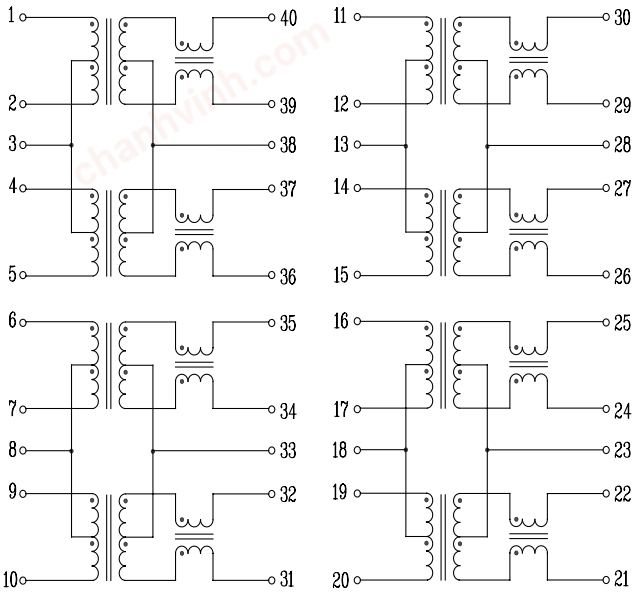

chanhvinh.com

Single and Quad 100BASE–TX SMD Modules

HB3005HLT, HXB2001HLT, HXB2002HLT, HB3004HLT, HB2003HLT, HB3006HLT, HB3002HLT, HB3003HLT and HXB3006HLT

Tape & Reel

HB2003HLT, HB3004/5HLT, HXB2001/2HLT

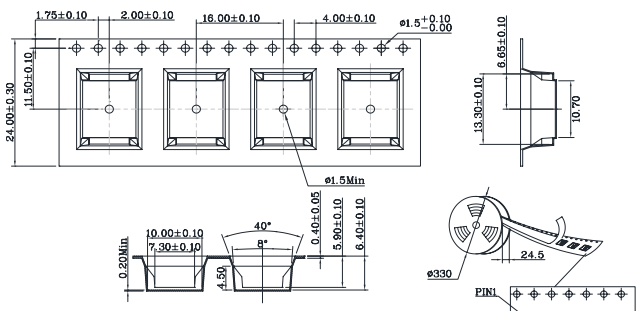

1. Material : Black Anti-Static polystyrene.
2. 10 sprocket hole pitch cumulative tolerance ±0.20
3. All dimensions meet EIA-481-E requirements
4. Thickness : 0.4±0.05mm
5. Component load per 13" reel : 600 pcs

HB3002/3HLT

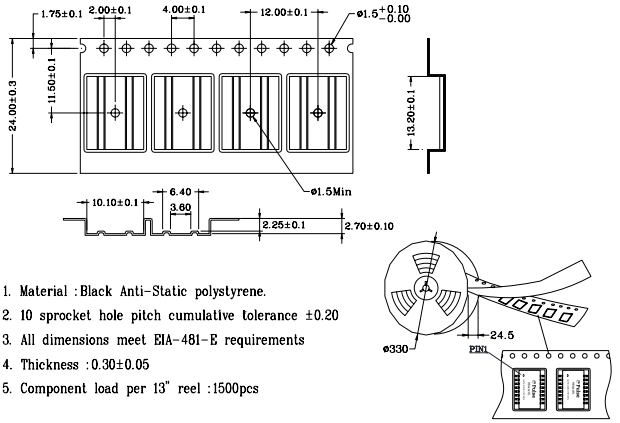

1. Material : Black Anti-Static polystyrene.
2. 10 sprocket hole pitch cumulative tolerance ±0.20
3. All dimensions meet EIA-481-E requirements
4. Thickness : 0.30±0.05
5. Component load per 13" reel : 1500pcs

HB/HXB3006HLT

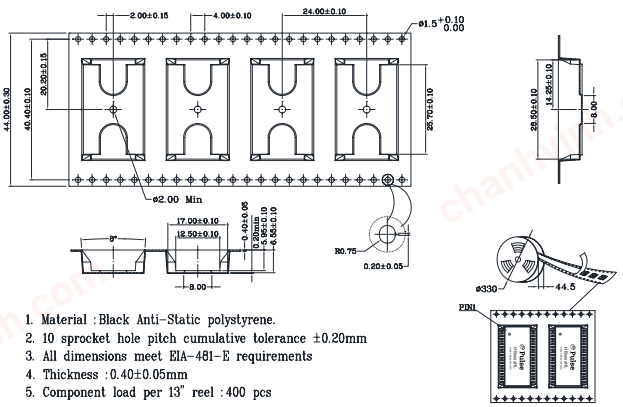

1. Material : Black Anti-Static polystyrene.
2. 10 sprocket hole pitch cumulative tolerance ±0.20mm
3. All dimensions meet EIA-481-E requirements
4. Thickness : 0.40±0.05mm
5. Component load per 13" reel : 400 pcs

Carton Package

HB2003HLT, HB3004/5HLT, HXB2001/2HLT

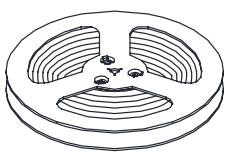

REEL

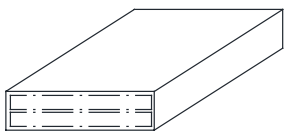

INNER BOX: 347x347x82

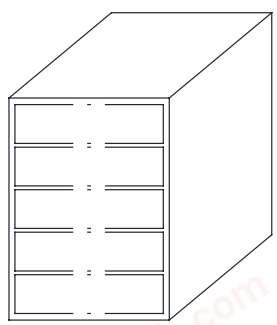

OUTER CARTON: 375x375x470

1. 1 REEL=600PCS
2. 1 INNER BOX=2 REELS=1200PCS
3. 1 OUTER CARTON=5 INNER BOXES=6000PCS

chanhvinh.com

Single and Quad 100BASE–TX SMD Modules

HB3005HLT, HXB2001HLT, HXB2002HLT, HB3004HLT, HB2003HLT, HB3006HLT, HB3002HLT, HB3003HLT and HXB3006HLT

Carton Package

HB3002/3HLT

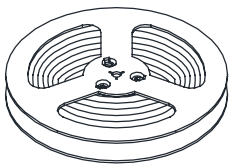

REEL

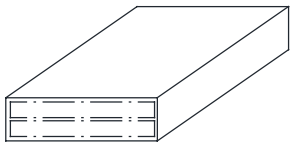

INNER BOX: 347x347x82

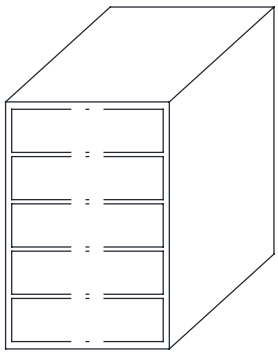

OUTER CARTON: 375x375x470

1. 1 REEL=1500PCS
2. 1 INNER BOX=2 REELS=3000PCS
3. 1 OUTER CARTON=5 INNER BOXS=15000PCS

HB/HXB3006HLT

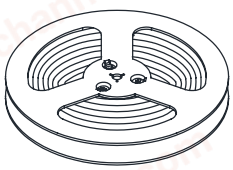

REEL

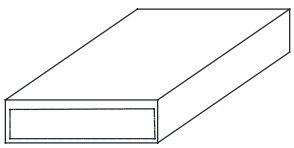

INNER BOX: 347x347x82

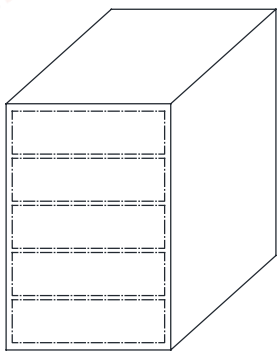

OUTER CARTON: 375x375x470

1. 1 REEL=400PCS
2. 1 INNER BOX=1 REEL=400PCS
3. 1 OUTER CARTON=5 INNER BOXES=2000PCS

For More Information:

Americas - prodinfo_network_americas@yageo.com | **Europe -** prodinfo_network_emea@yageo.com | **Asia -** prodinfo_network_asia@yageo.com

Performance warranty of products offered on this data sheet is limited to the parameters specified. Data is subject to change without notice. Other brand and product names mentioned herein may be trademarks or registered trademarks of their respective owners. © Copyright, 2024. Pulse Electronics, Inc. All rights reserved.

YAGEO Corporation and its affiliates do not recommend the use of commercial or automotive grade products for high reliability applications or manned space flight.