chanhvinh.com

RoHS COMPLIANT

Pulse Electronics
www.pulseelectronics.com

NOTES:

1. ROHS COMPLIANT
2. HEADER: DAP (DIALLYL PHTHALATE) WITH FLAMMABILITY RATING UL 94V-0 OR BETTER.
3. STORAGE TEMPERATURE: -50°C TO +125°C
4. COMPLIANCE TO J-STD:
   - A. J-STD-002: SOLDERABILITY AT 245°C REFLOW PROFILE
   - B. J-STD-020: LEVEL 1, NO MOISTURE SENSITIVE
   - C. J-STD-075: R7, 245°C MAXIMUM THROUGH REFLOW SOLDER
5. TO ORDER TAPE & REEL PACKAGING ADD A "T" SUFFIX TO THE PART NUMBER(i.e HX5120NL BECOMES HX5120NLT).

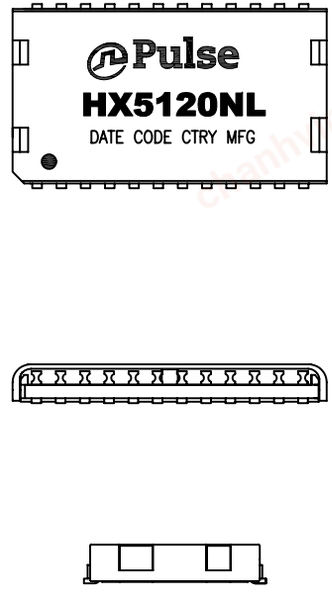

FINAL OUTLINE

© Copyright, 2014. Pulse Electronics Corp. All rights reserved. Pulse confidential & proprietary. (06/19/14)

PRODUCT DESCRIPTION	TLA DRAWING	PS DRAWING	SHEET	PART NO.	DATASHEET REV.
MDL,SIN,1GD,1:1,SM,TU	HX5120NL-10	PS-2422.001-B	1 OF 3	HX5120NL	A

E-MAIL: PRODINFONETWORK@PULSEELECTRONICS.COM(US), ASIA@PULSEELECTRONICS.COM(Asia) PHONE: USA:858 674 8100, GERMANY:49 7032 78060, SINGAPORE:65 6287 8998, SHANGHAI:86 21 62787060, TAIWAN:886 3 4356768

chanhvinh.com

RoHS COMPLIANT

Pulse Electronics
www.pulseelectronics.com

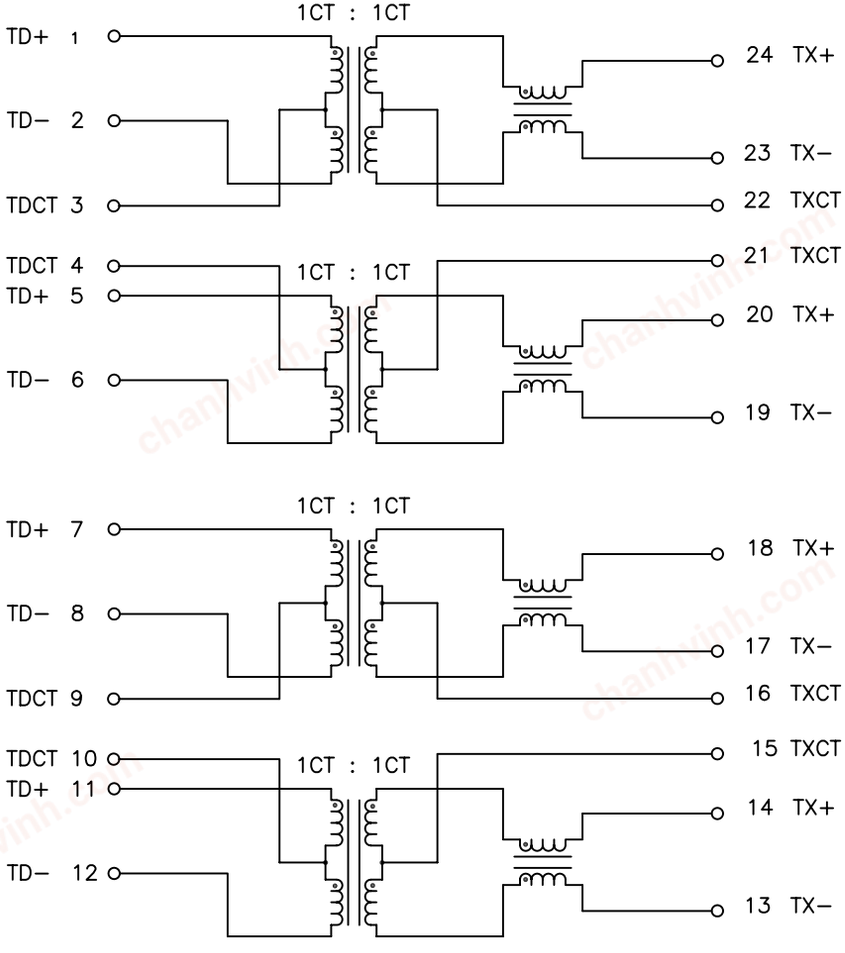

SCHEMATIC

ELECTRICAL CHARACTERISTICS AT +25°C UNLESS OTHER SPECIFIED

MEETS IEEE 802.3 SPECIFICATION

PARAMETER	SPECIFICATIONS	
OPERATING TEMPERATURE	−40°C ~ +85°C	
TURNS RATIO	1 : 1 ±2%	
POLARITY	PER SCHEMATIC	
INSERTION LOSS	100 KHz	1−125 MHz
	−1.2 dB MAX	$-0.2-0.002*f^{1.4}$ dB MAX
RETURN LOSS (Z OUT = 100 OHM ±15%)	.1−40 MHz	40−100 MHz
	−16 dB MIN	$-10+20*\text{LOG}_{10}(f/80\ \text{MHz})$ dB MIN
INDUCTANCE (OCL) (MEDIA SIDE, −40°C~+85°C)	350 uH MIN	(MEASURED AT 100 KHz, 100 mVRMS AND WITH 8 mA DC BIAS)
CROSSTALK, ADJACENT CHANNELS	1 MHz	10−100 MHz
	−50 dB MIN	$-55+22*\text{LOG}_{10}(f/10)$ dB MIN
COMMON MODE REJECTION RATIO	2 MHz	30−200 MHz
	−42 dB MIN	$-15+20*\text{LOG}_{10}(f/200)$ dB MIN
DC RESISTANCE, 1/2 WINDING	.65 OHMS MAX	
DC RESISTANCE IMBALANCE	±.065 OHMS MAX (CENTER TAP SYMMETRY)	
INPUT − OUTPUT ISOLATION	1500 VRMS MIN @ 60 SECONDS	

NOTE: f IS FREQUENCY IN MHz.

© Copyright, 2014. Pulse Electronics Corp. All rights reserved. Pulse confidential & proprietary. (06/19/14)

E−MAIL: PRODINFONETWORK@PULSEELECTRONICS.COM(US), ASIA@PULSEELECTRONICS.COM(Asia) PHONE: USA:858 674 8100, GERMANY:49 7032 78060, SINGAPORE:65 6287 8998, SHANGHAI:86 21 62787060, TAIWAN:886 3 4356768

chanhvinh.com

RoHS COMPLIANT

Pulse Electronics
www.pulseelectronics.com

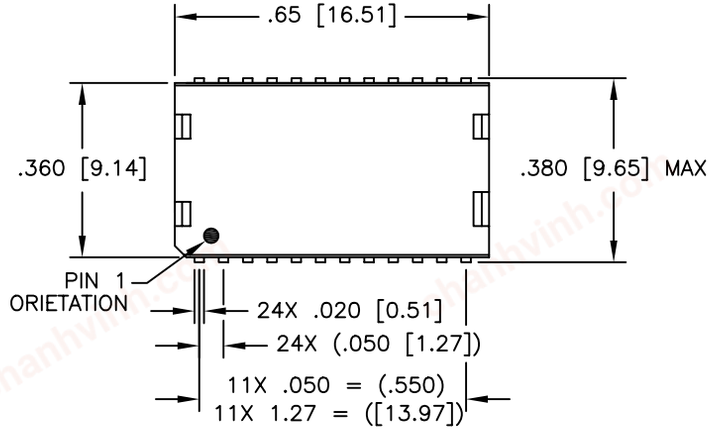

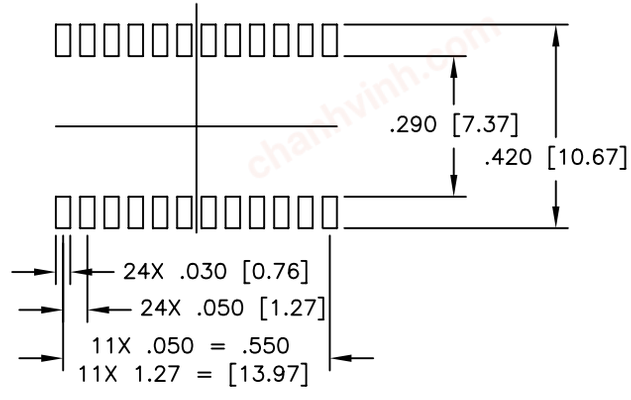

SUGGESTED LAND PATTERN

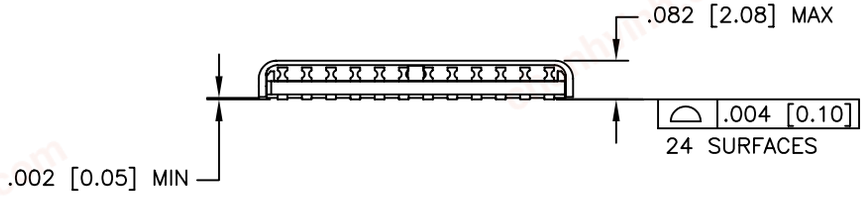

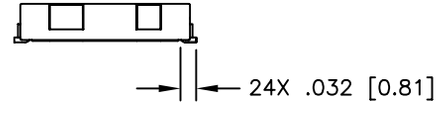

DIMENSIONS ARE IN INCHES [MILLIMETERS] WITH THE FOLLOWING
TOLERANCES: [MILLIMETERS] ARE FOR REFERENCE ONLY.
.XX= ±.01 [±0.25]
.XXX= ±.005 [±0.13]

© Copyright, 2014. Pulse Electronics Corp. All rights reserved. Pulse confidential & proprietary. (06/19/14)

PRODUCT DESCRIPTION	TLA DRAWING	PS DRAWING	SHEET	PART NO.	DATASHEET REV.
MDL,SIN,1GD,1:1,SM,TU	HX5120NL-10	PS-2422.001-B	3 OF 3	HX5120NL	A

E-MAIL: PRODINFONETWORK@PULSEELECTRONICS.COM(US), ASIA@PULSEELECTRONICS.COM(Asia) PHONE: USA:858 674 8100, GERMANY:49 7032 78060, SINGAPORE:65 6287 8998, SHANGHAI:86 21 62787060, TAIWAN:886 3 4356768