chanhvinh.com

NOTES:

1. ROHS COMPLIANT
2. HEADER: DAP (DIALLYL PHTHALATE) WITH FLAMMABILITY RATING UL 94V-0 OR BETTER.
3. STORAGE TEMPERATURE: -50°C TO +125°C
4. COMPLIANCE TO J-STD:
   - A. J-STD-002: SOLDERABILITY AT 245°C REFLOW PROFILE
   - B. J-STD-020: LEVEL 1, NO MOISTURE SENSITIVE
   - C. J-STD-075: R7, 245°C MAXIMUM THROUGH REFLOW SOLDER
5. TO ORDER TAPE & REEL PACKAGING ADD A "T" SUFFIX TO THE PART NUMBER(i.e HX1188NL BECOMES HX1188NLT).

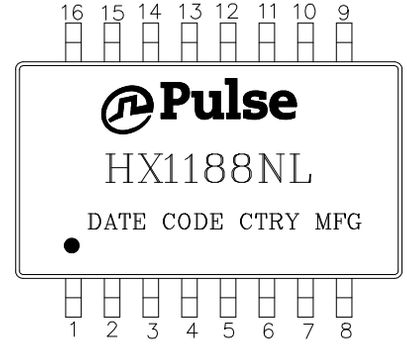

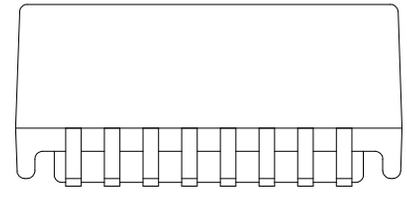

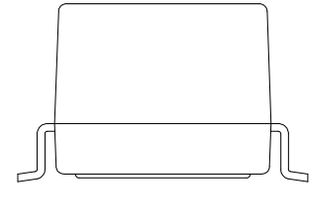

FINAL OUTLINE

@ Copyright, 2020. Pulse Electronics Corp. All rights reserved. Pulse confidential & proprietary. (10/22/20)

PRODUCT DESCRIPTION	TLA DRAWING	PS DRAWING	SHEET	PART NO.	DATASHEET REV.
MDL,SIN,100D,1:1,SM,TU	HX1188NL-17	PS-2005.001-G	1 OF 4	HX1188NL	H

chanhvinh.com

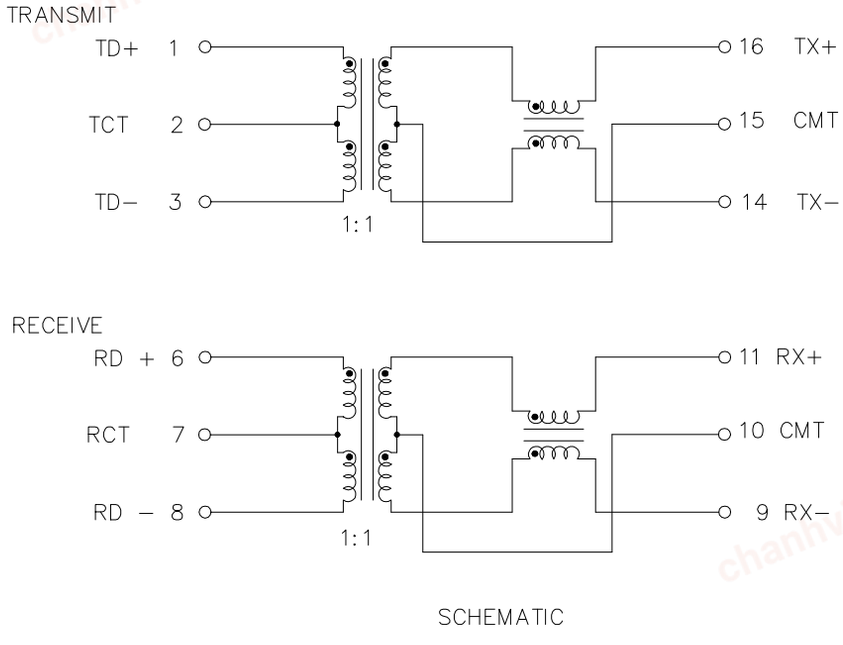

SCHEMATIC

ELECTRICAL CHARACTERISTICS AT +25°C UNLESS OTHER SPECIFIED
MEETS IEEE 802.3 SPECIFICATION

PARAMETER	SPECIFICATIONS	
OPERATING TEMP	−40°C TO +85°C	
TURNS RATIO	1 : 1 ±2%	
POLARITY	PER SCHEMATIC	
▽ INDUCTANCE (OCL) (16−14) = (11−9) (MEDIA SIDE,−40°C~+85°C)	350 uH MIN (MEASURED AT 100 KHz, 100 mVRMS AND WITH 8 mA DC BIAS)	
▽ INSERTION LOSS	1−100 MHz	125 MHz
	−1.0 dB MAX	−3.0 dB MAX
RETURN LOSS Z_{OUT} = 100 OHMS	5 MHz	30−80 MHz
	−18 dB MIN	$-16 + 20\log_{10}(f/30\ \text{MHz})$ dB MIN
CROSSTALK (TX−RX)	1 MHz	5−100 MHz
	−62 dB MIN	$-45 + 21\log_{10}(f/30\ \text{MHz})$ dB MIN
DIFFERENTIAL TO COMMON MODE REJECTION	5−200 MHz	
	$-50 + 17\log_{10}(f/5\ \text{MHz})$ dB MIN	
▽ INPUT − OUTPUT ISOLATION	1500 VRMS FOR 60 SECONDS	

NOTE: 1. f IS FREQUENCY IN MHz.
2. "▽" IS SPECIAL CHARACTERISTIC.

@ Copyright, 2020. Pulse Electronics Corp. All rights reserved. Pulse confidential & proprietary. (10/22/20)

chanhvinh.com

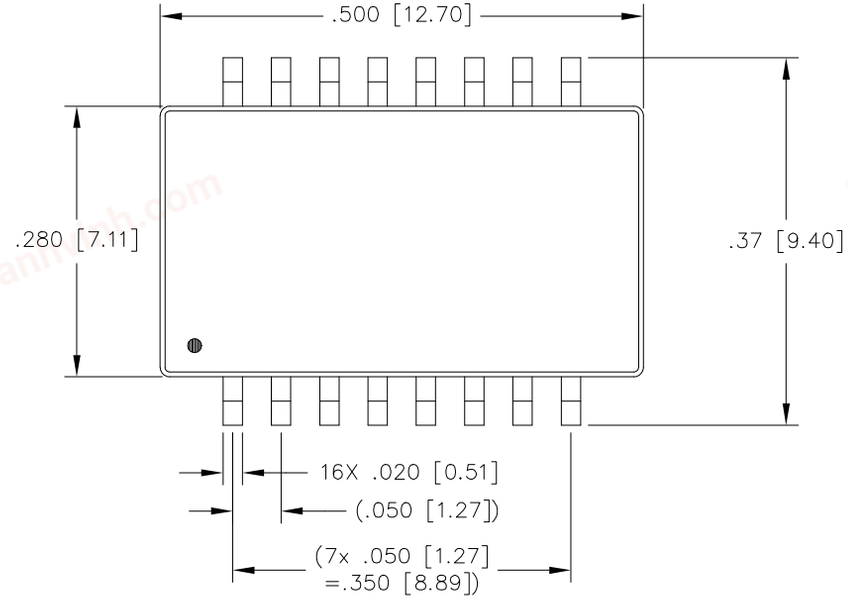

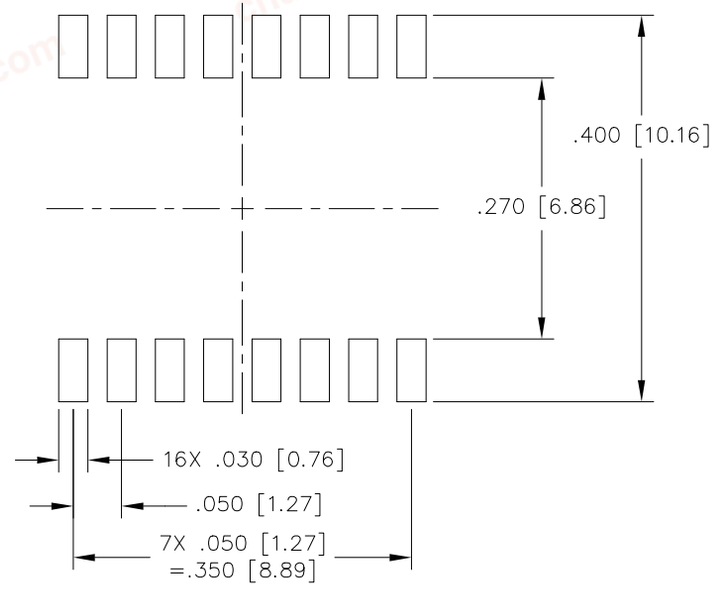

SUGGESTED LAND PATTERN

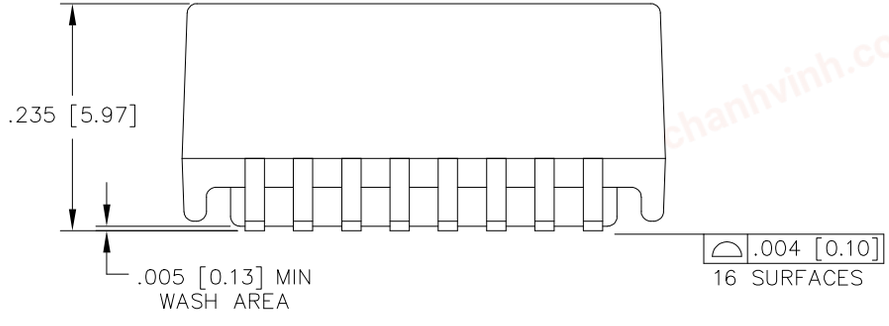

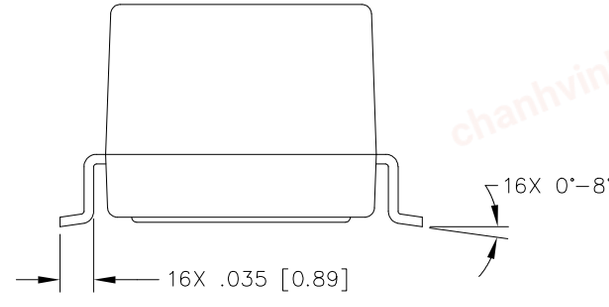

DIMENSIONS ARE IN INCHES [MILLIMETERS] WITH THE FOLLOWING
TOLERANCES: [MILLIMETERS] ARE FOR REFERENCE ONLY.
.XX= ±.01 [±0.25]
.XXX= ±.005 [±0.13]

@ Copyright, 2020. Pulse Electronics Corp. All rights reserved. Pulse confidential & proprietary. (10/22/20)

PRODUCT DESCRIPTION	TLA DRAWING	PS DRAWING	SHEET	PART NO.	DATASHEET REV.
MDL,SIN,100D,1:1,SM,TU	HX1188NL–17	PS–2005.001–G	3 OF 4	HX1188NL	H

chanhvinh.com

NOTE: PACK 600 PIECES PER REEL

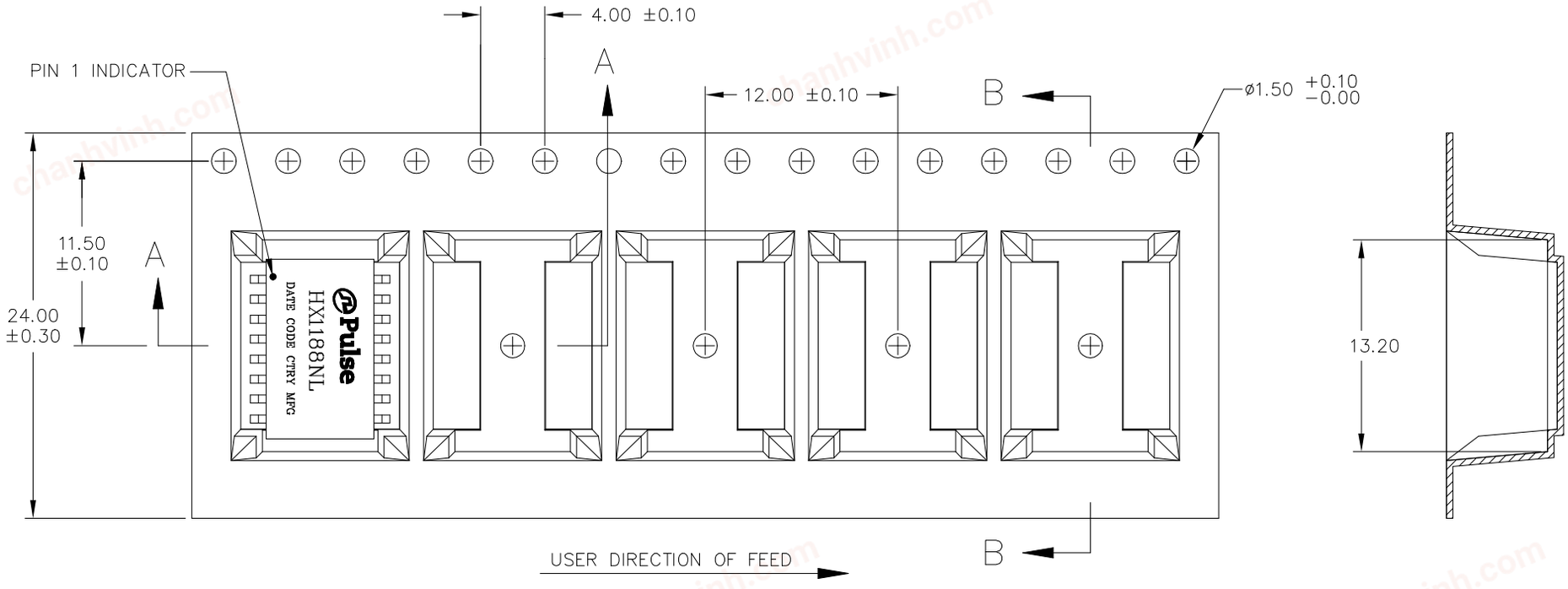

SECTION B–B

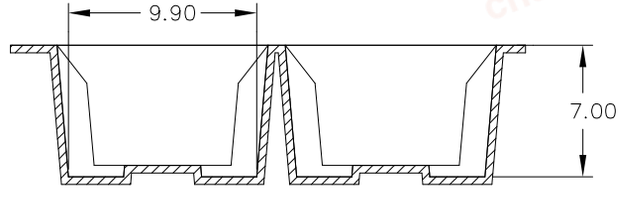

SECTION A–A

DIMENSIONS ARE IN MM WITH THE FOLLOWING
TOLERANCES: ±0.10

@ Copyright, 2020. Pulse Electronics Corp. All rights reserved. Pulse confidential & proprietary. (10/22/20)

PRODUCT DESCRIPTION	TLA DRAWING	PS DRAWING	SHEET	PART NO.	DATASHEET REV.
MDL,SIN,100D,1:1,SM,TU	HX1188NL–17	PS–2005.001–G	4 OF 4	HX1188NL	H