chanhvinh.com

Pulse
A YAGEO Company

NOTES: UNLESS OTHERWISE SPECIFIED

1.

NOTICE:	
RoHS-6 HF ✓	THIS IS A RoHS COMPLIANT AND HALOGEN-FREE COMPONENT/PRODUCT.

2. SOLDERABILITY: CONFORMS TO ANSI/J-STD-002, IPC/EIA J-STD-003A.
3. OPERATING TEMPERATURE: -40°C TO +125°C
4. STORAGE TEMPERATURE: -50°C TO +125°C
5. JEDEC MOISTURE: LEVEL 1.
6. AEC-Q200 QUALIFIED
7. TO ORDER TAPE & REEL PACKAGING ADD A "T" SUFFIX TO THE PART NUMBER (ie. HM2102NL BECOMES HM2102NLT)
8. UNLESS OTHERWISE SPECIFIED, ALL DIMENSIONS ARE IN INCHES. TOLERANCES ARE:

DECIMALS
.XX ±.01
.XXX ±.005

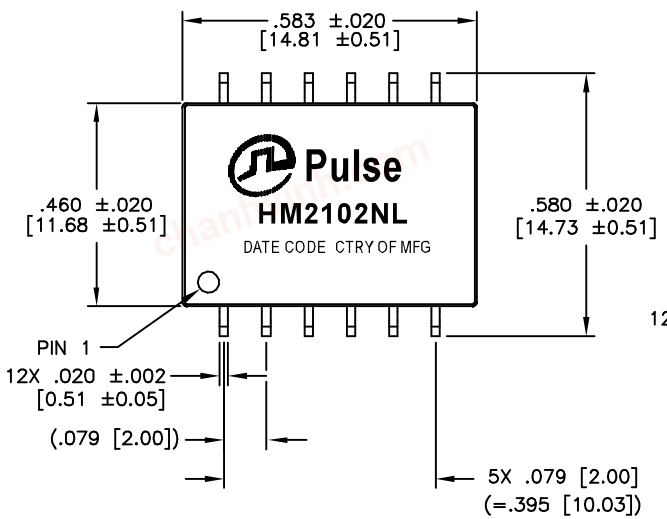

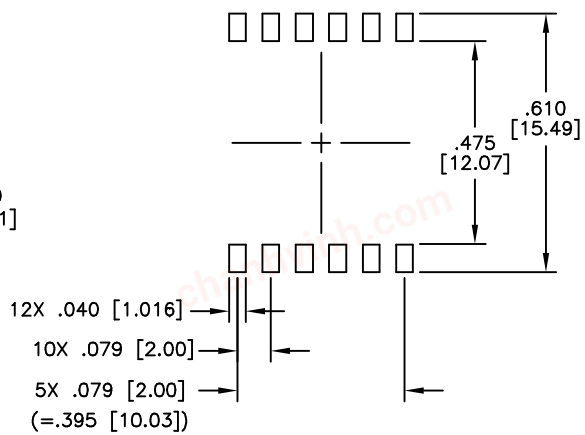

SUGGESTED LAND PATTERN

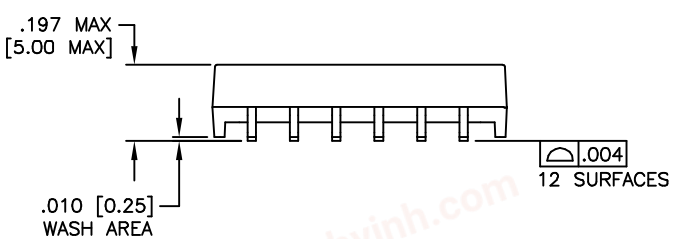

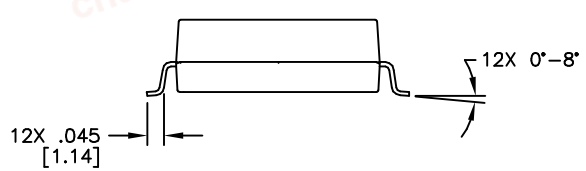

© Copyright, 2019. Pulse Electronics Corp. All rights reserved. Pulse confidential & proprietary. (11/11/19)

PRODUCT DESCRIPTION	TLA DRAWING	PS DRAWING	SHEET	PART NO.	DATASHEET REV.
TRANSFORMER/CMC,DUAL,4.3kV,SMT	HM2102NL-12	PS-01527.001-A	1 OF 2	HM2102NL	O

E-MAIL: PRODINFONETWORK@PULSEELECTRONICS.COM(US), ASIA@PULSEELECTRONICS.COM(Asia) PHONE: USA:858 674 8100, GERMANY:49 7032 78060, SINGAPORE:65 6287 8998, SHANGHAI:86 21 62787060, TAIWAN:886 3 4356768

chanhvinh.com

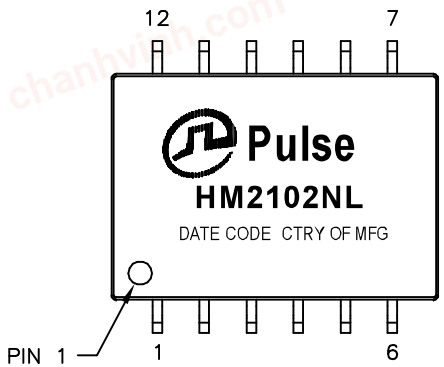

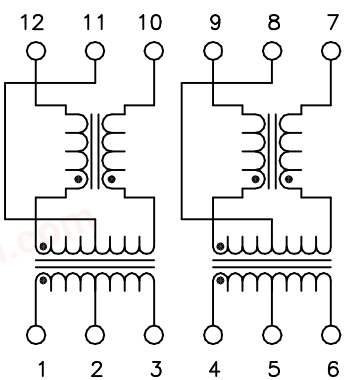

SCHEMATIC

ELECTRICAL CHARACTERISTICS AT +25°C UNLESS OTHER SPECIFIED

PARAMETER	SPECIFICATIONS	
QUALIFICATION	PER AEC-Q200	
DESIGN CONSTRUCTION	FUNCTIONAL INSULATION	
CREEPAGE DISTANCE	> 10mm	
OPERATING TEMPERATURE	-40°C TO 125 °C	
TURNS RATIO	1.00 ± 2%	
POLARITY	PER SCHEMATIC	
DC RESISTANCE	TRANSFORMER SIDE	CM CHOKE SIDE
	0.45 OHMS MAX	0.85 OHMS MAX
INDUCTANCE (OCL) AT 100 kHz, 100 mV (-40°C TO +125°C)	150 uH MIN, 450 uH MAX	
LEAKAGE INDUCTANCE	0.50 uH MAX @ 100 kHz	
INSERTION LOSS	0.25 dB MAX @ 4 MHz	
RETURN LOSS (Z OUT = 100 OHM ±1%)	20 dB MIN @ 4 MHz	
CROSSTALK, ADJACENT CHANNELS	-50 dB MIN @ 4 MHz	
COMMON MODE REJECTION RATIO	1-10 MHz	10-1000 MHz
	-35 dB MIN	-20 dB MIN
INPUT - OUTPUT ISOLATION	4300 VDC OR 3100 VAC FOR 60 SECONDS WITH 1.0 mA MAX OF LEAKAGE CURRENT	
INSULATION RESISTANCE	400 MEGAOHMS MINIMUM	
WORKING VOLTAGE	1600 VDC FOR 15 YEARS	

© Copyright, 2019. Pulse Electronics Corp. All rights reserved. Pulse confidential & proprietary. (11/11/19)

PRODUCT DESCRIPTION	TLA DRAWING	PS DRAWING	SHEET	PART NO.	DATASHEET REV.
TRANSFORMER/CMC,DUAL,4.3kV,SMT	HM2102NL-12	PS-01527.001-A	2 OF 2	HM2102NL	O

E-MAIL: PRODINFONETWORK@PULSEELECTRONICS.COM(US), ASIA@PULSEELECTRONICS.COM(Asia) PHONE: USA:858 674 8100, GERMANY:49 7032 78060, SINGAPORE:65 6287 8998, SHANGHAI:86 21 62787060, TAIWAN:886 3 4356768