chanhvinh.com

Single Port 1Gigabit PoE SMD Magnetic Modules

HB5012HLT, HXB5012HLT, HB6002HLT, HB6003HLT, HB6006HLT, HB6007HLT, HXB6004HLT, HXB6005HLT, HXB6009HLT, HXB6008HLT

Pulse a YAGEO company

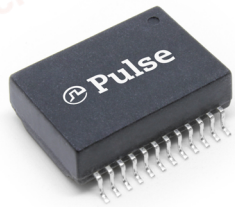

- *Fully RoHS and Halogen Free*
- *Multiple options within a single footprint*
- *Supports 4 pair Power over Ethernet (PoE) up to 90W*
- *Meet or exceed IEEE802.3ab/af/at/bt*
- *Compatible with all 1:1 turns ration PHYs*
- *Commercial and Industrial Temperature*
- *Reliable SMD packages support 245°C pk reflow*
- *All components supplied in Tape and Reel*

Electrical Specification @ 25°C (OCL@ 8mA DC)

Part Number	Media side Inductance (@100KHz/0.1Ve) uH min	Insertion Loss (dB max)	Return Loss (dB min)		PoE (Current Per Pair mA)	Operating Temperature (°C)	Isolation (Pri:Sec)	Note
		1-100 MHz	1-40MHz	40< f ≦ 100 MHz				
HB5012HLT	350	-1.0	-16	-(10-20 log10(f/80))	-	0 to 70°	1500Vrms	-
HXB5012HLT	350	-1.0	-16	-(10-20 log10(f/80))	-	-40° to 85°	1500Vrms	-
HB6002HLT	350	-1.0	-16	-(10-20 log10(f/80))	720	0° to 70°	1500Vrms	60W 4pair PoE
HB6006HLT	350	-1.0	-16	-(10-20 log10(f/80))	350	0° to 70°	5000Vrms	30W 4pair PoE
HB6007HLT	350	-1.0	-16	-(10-20 log10(f/80))	720	0° to 70°	5000Vrms	60W PoE+, Surge CM 6KV
HB6003HLT	350	-1.0	-16	-(10-20 log10(f/80))	720	0 to 70°	1500Vrms	60W 4pair PoE
HXB6004HLT	350	-1.0	-16	-(10-20 log10(f/80))	720	-40° to 85°	1500Vrms	60W 4pair PoE
HXB6005HLT	350	-1.0	-16	-(10-20 log10(f/80))	720	-40° to 85°	1500Vrms	60W 4pair PoE
HXB6009HLT	350	-1.0	-16	-(10-20 log10(f/80))	720	-40° to 85°	1500Vrms	60W PoE+, Surge DM 7KV

Note: ** Specifications listed above refer to the base component part number that is printed on the product - ie HXB6009HLT will be HXB6009HL*

Electrical Specification @ 25°C (OCL@ 15mA DC)

Part Number	Media side Inductance (@100KHz/0.1Ve) uH min	Insertion Loss (dB max)	Return Loss (dB min)		PoE (Current Per Pair mA)	Operating Temperature (°C)	Isolation (Pri:Sec)	Note
		1-100 MHz	1-40MHz	40< f ≦ 100 MHz				
HXB6008HLT	350	-1.4	-16	-(10-20 log10(f/80))	1000	-40° to 85°	1500Vrms	90W 4pair PoE+

Note: ** Specifications listed above refer to the base component part number that is printed on the product - ie HXB6008HLT will be HXB6008HL*

Process and Materials

Notes:

1. Storage Temperature:
   HBxxxxHL = -20 to +125°C
   HXBxxxxHL = -50 to +125°C
2. Compliance to JEDEC-J-STD 020:
   i. Moisture Sensitive Level 1
   ii. Maximum peak Reflow Solder temperature 245°C
3. All parts come in 13" (330mm) Diameter Tape and reel - see page 3 for details
4. Header: Black Thermoset Plastic - Material flammability rating UL 94V-0
5. Lead Frame: Cooper Alloy
6. Underplate / Overplate: Tin electro-deposited over Nickel
7. Finish: Matte finish Tin solder

chanhvinh.com

Single Port 1Gigabit PoE SMD Magnetic Modules

HB5012HLT, HXB5012HLT, HB6002HLT, HB6003HLT, HB6006HLT, HB6007HLT, HXB6004HLT, HXB6005HLT, HXB6009HLT, HXB6008HLT

Pulse a YAGEO company

Mechanicals

HB5/HB6xxxHLT/HXB6xxxHLT

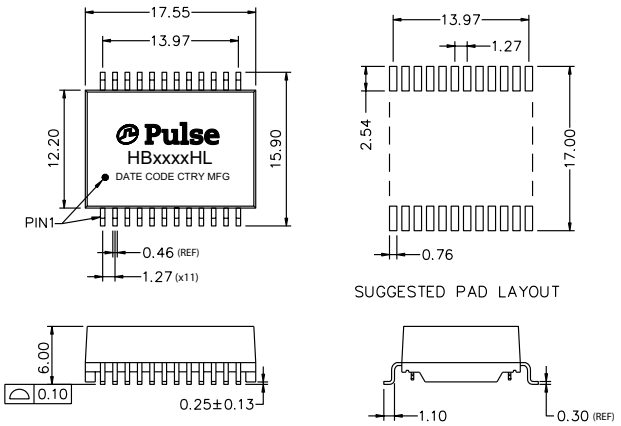

Dimensions: mm

Unless otherwise specified the following tolerances apply:
xx.xx = ±0.25
x.xx = ±025
0.xx = ±0.13

Schematics

HB/HXB5012HLT, HB6xxxHLT, HXB6004HLT

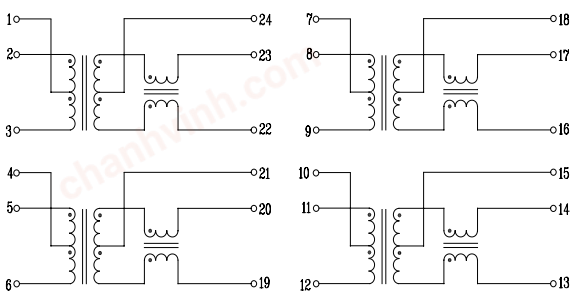

HB6002HLT

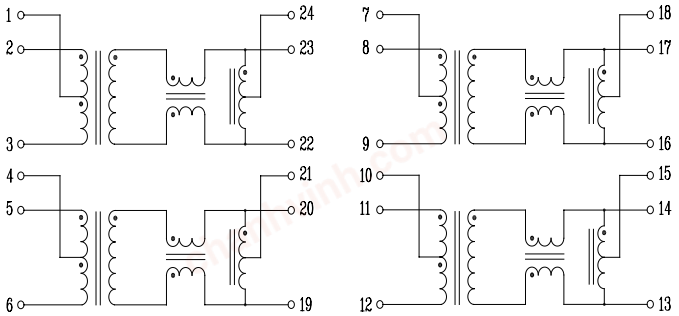

HXB6005HLT, HXB6008HLT, HXB6009HLT

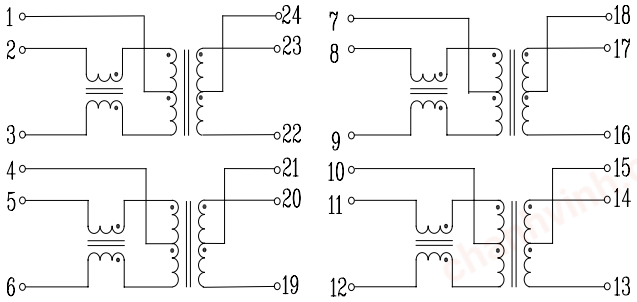

chanhvinh.com

Single Port 1Gigabit PoE SMD Magnetic Modules

HB5012HLT, HXB5012HLT, HB6002HLT, HB6003HLT, HB6006HLT, HB6007HLT, HXB6004HLT, HXB6005HLT, HXB6009HLT, HXB6008HLT

Tape & Reel

HB/HXB5012HLT, HB600xHLT, HXB600xHLT

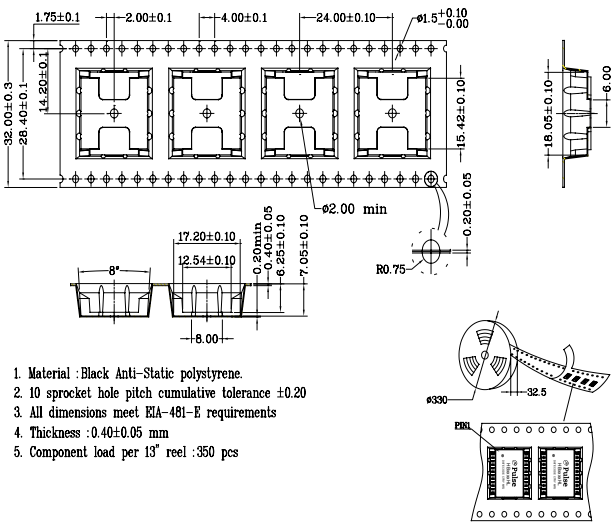

1. Material : Black Anti-Static polystyrene.
2. 10 sprocket hole pitch cumulative tolerance ±0.20
3. All dimensions meet EIA-481-E requirements
4. Thickness : 0.40±0.05 mm
5. Component load per 13" reel : 350 pcs

Carton Package

HB/HXB5012HLT, HB600xHLT, HXB600xHLT

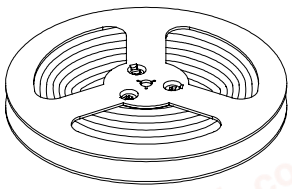

REEL

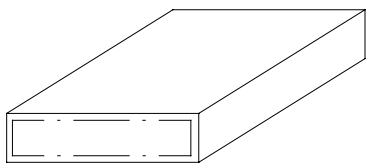

INNER BOX: 347x347x82

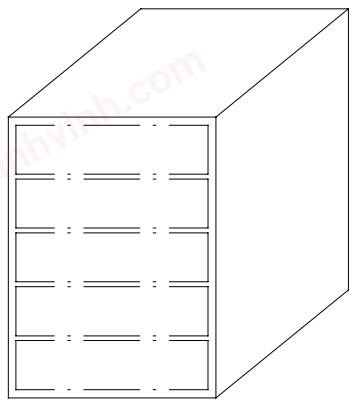

OUTER CARTON: 375x375x470

1. 1 REEL=350PCS
2. 1 INNER BOX=1 REEL=350PCS
3. 1 OUTER CARTON=5 INNER BOXES=1750PCS

For More Information:

Americas - prodinfo_network_americas@yageo.com | **Europe -** prodinfo_network_emea@yageo.com | **Asia -** prodinfo_network_asia@yageo.com

Performance warranty of products offered on this data sheet is limited to the parameters specified. Data is subject to change without notice. Other brand and product names mentioned herein may be trademarks or registered trademarks of their respective owners. © Copyright, 2024. Pulse Electronics, Inc. All rights reserved.

YAGEO Corporation and its affiliates do not recommend the use of commercial or automotive grade products for high reliability applications or manned space flight.