chanhvinh.com

Single and Dual 2.5Gigabit SMD Modules

HXB4009HLT, HB4009HLT, HB4010HLT, HB4011HLT and HB4012HLT

Pulse
a YAGEO company



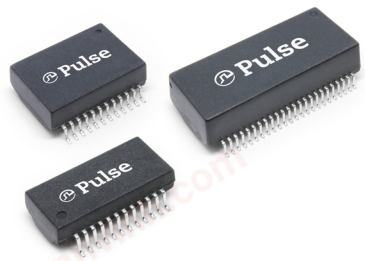

- *Fully RoHS and Halogen Free*
- *Compact, Low Profile (4.0mm) options*
- *High Isolation and Surge option*
- *Meet or exceed IEEE802.3bz*
- *Compatible with all major PHYs*
- *Commercial and Industrial Temperature*
- *Reliable SMD packages support 245°C pk reflow*
- *All components supplied in Tape and Reel*

Electrical Specification @ 25°C

Part Number*	Media side Inductance (@100KHz/0.1Ve) uH min	Insertion Loss (dB max)		Return Loss (dB min)		PoE (Current Per Pair mA)	Operating Temperature (°C)	Isolation (Pri:Sec)	Note
		1-100 MHz	125 MHz	1-40MHz	40< f ≦ 125 MHz				
HB4010HLT	180	-1.0	-1.5	-16	-(16-10 log10(f /40))	-	0 to +70°	1500Vrms	-
HB4011HLT	180	-1.0	-1.5	-16	-(16-10 log10(f /40))	-	0 to +70°	3000Vrms	Surge CM 4KV
HB4012HLT	180	-1.0	-1.5	-16	-(16-10 log10(f /40))	-	0 to +70°	1500Vrms	Dual Port
HB4009HLT	180	-1.0	-1.5	-16	-(16-10 log10(f /40))	-	0 to +70°	1500Vrms	-
HXB4009HLT	180	-1.0	-1.5	-16	-(16-10 log10(f /40))	-	-40 to +85°	1500Vrms	-

Note: ** Specifications listed above refer to the base component part number that is printed on the product - ie HXB4009HLT will be HXB4009HL*

Process and Materials

Notes:

1. Storage Temperature:
   HBxxxxHL = -20 to +125°C
   HXBxxxxHL = -50 to +125°C
2. Compliance to JEDEC-J-STD 020:
   i. Moisture Sensitive Level 1
   ii. Maximum peak Reflow Solder temperature 245°C
3. All parts come in 13" (330mm) Diameter Tape and reel - see page 3-4 for details
4. Header: Black Thermoset Plastic - Material flammability rating UL 94V-0
5. Lead Frame: Cooper Alloy
6. Underplate / Overplate: Tin electro-deposited over Nickel
7. Finish: Matte finish Tin solder

chanhvinh.com

Single and Dual 2.5Gigabit SMD Modules

HXB4009HLT, HB4009HLT, HB4010HLT, HB4011HLT and HB4012HLT

Pulse a YAGEO company

Mechanical

HB/HXB4009HLT

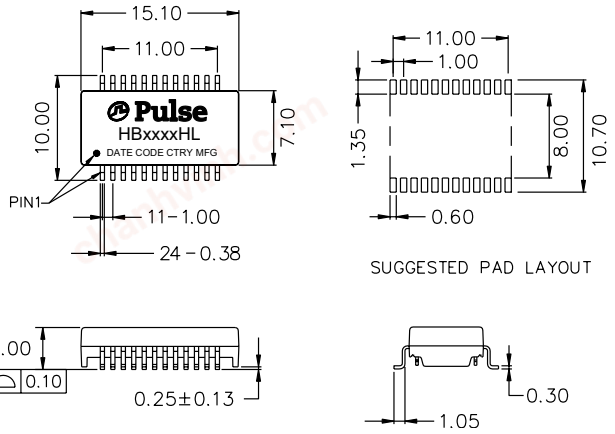

HB4010/11HLT

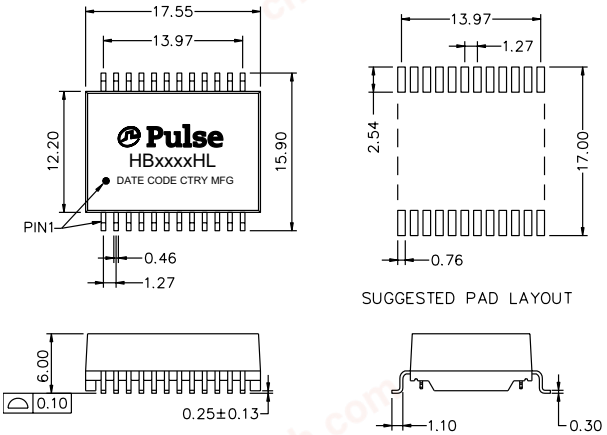

HB4012HLT

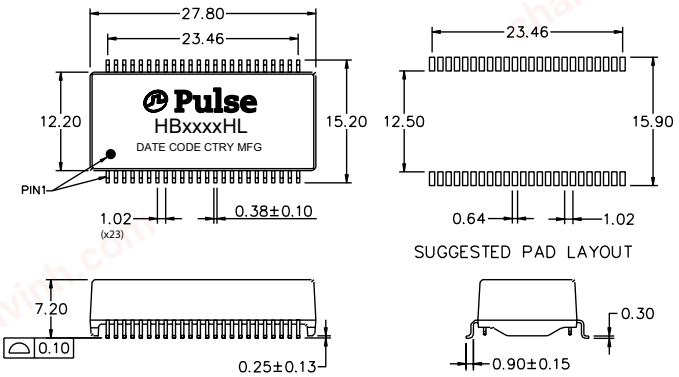

Dimensions: mm

Unless otherwise specified the following tolerances apply:
xx.xx = ±0.25
x.xx = ±025
0.xx = ±0.13

Schematic

HXB4009HLT, HB4009HLT, HB4010HLT, HB4011HLT

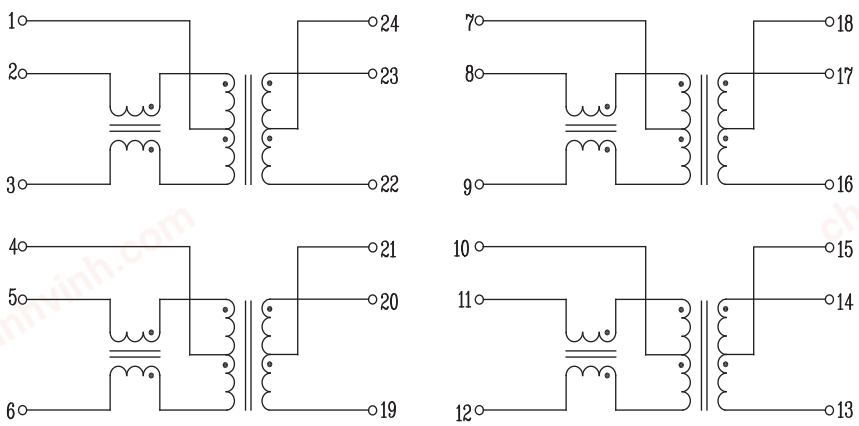

chanhvinh.com

Single and Dual 2.5Gigabit SMD Modules

HXB4009HLT, HB4009HLT, HB4010HLT, HB4011HLT and HB4012HLT

Pulse a YAGEO company

Schematic

HB4012HLT

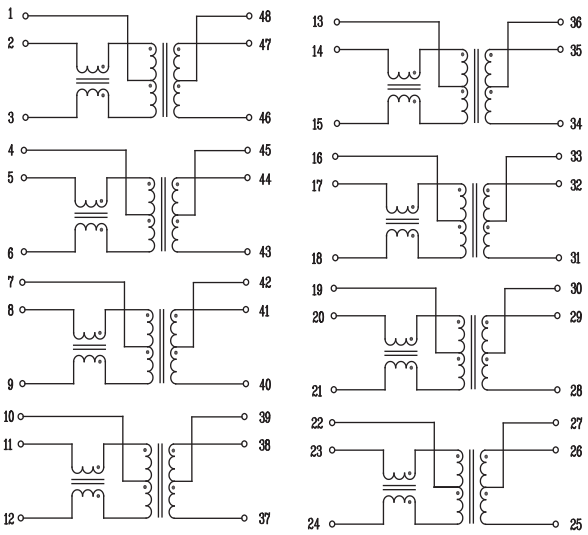

Tape & Reel

HB4009HLT, HXB4009HLT

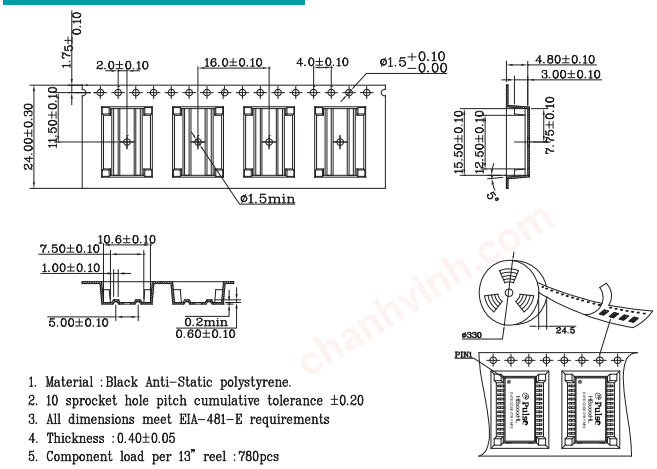

1. Material : Black Anti-Static polystyrene.
2. 10 sprocket hole pitch cumulative tolerance ±0.20
3. All dimensions meet EIA-481-E requirements
4. Thickness : 0.40±0.05
5. Component load per 13" reel : 780pcs

HB4010HLT, HB4011HLT

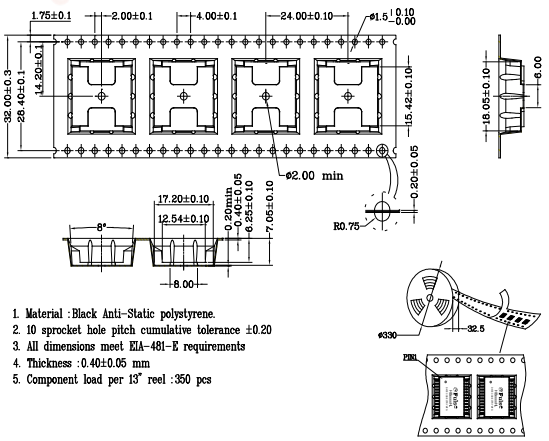

1. Material : Black Anti-Static polystyrene.
2. 10 sprocket hole pitch cumulative tolerance ±0.20
3. All dimensions meet EIA-481-E requirements
4. Thickness : 0.40±0.05 mm
5. Component load per 13" reel : 350 pcs

HB4012HLT

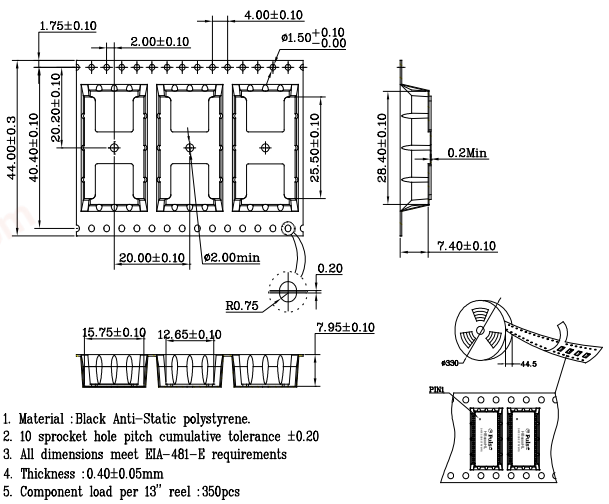

1. Material : Black Anti-Static polystyrene.
2. 10 sprocket hole pitch cumulative tolerance ±0.20
3. All dimensions meet EIA-481-E requirements
4. Thickness : 0.40±0.05mm
5. Component load per 13" reel : 350pcs

chanhvinh.com

Single and Dual 2.5Gigabit SMD Modules

HXB4009HLT, HB4009HLT, HB4010HLT, HB4011HLT and HB4012HLT

Carton Package

HB4009HLT, HXB4009HLT

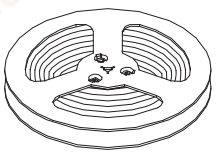

REEL

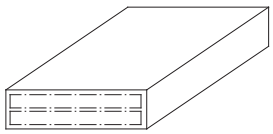

INNER BOX: 347x347x82

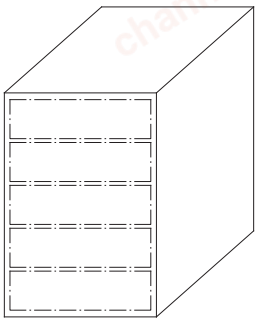

OUTER CARTON: 375x375x470

1. 1 REEL=780PCS
2. 1 INNER BOX=2 REELS=1560PCS
3. 1 OUTER CARTON=5 INNER BOXES=7800PCS

HB4012HLT, HB4011HLT, HB4010HLT

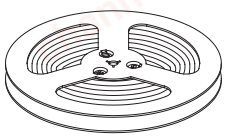

REEL

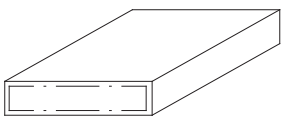

INNER BOX: 347x347x82

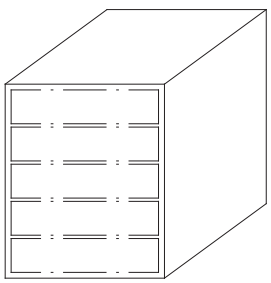

OUTER CARTON: 375x375x470

1. 1 REEL=350PCS
2. 1 INNER BOX=1 REEL=350PCS
3. 1 OUTER CARTON=5 INNER BOXES=1750PCS

For More Information:

Americas - prodinfo_network_americas@yageo.com | **Europe -** prodinfo_network_emea@yageo.com | **Asia -** prodinfo_network_asia@yageo.com

Performance warranty of products offered on this data sheet is limited to the parameters specified. Data is subject to change without notice. Other brand and product names mentioned herein may be trademarks or registered trademarks of their respective owners. © Copyright, 2024. Pulse Electronics, Inc. All rights reserved.

YAGEO Corporation and its affiliates do not recommend the use of commercial or automotive grade products for high reliability applications or manned space flight.