chanhvinh.com

Current Sense Transformers
FIS 1X5 Series

Pulse a YAGEO company

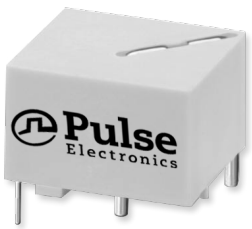

- *Current sense transformers provide output feedback to the pulse control circuitry allowing low-cost regulation of switch-mode power supplies*
- *Fully encapsulated construction, Reinforced Insulation.*
- *Isolation primary to secondary: 4000V AC*
- *25A maximum primary current, 500kHz maximum frequency*
- *Applications: switch-mode power supplies, lighting, switch controls*

Electrical Specifications @ 25°C – Operating Temperature -40°C to +125°C

Part No.	Prim/Sec Ratio	Sec L (mH MIN)	Sec DCR (Ω MAX)	V x τ (MAX)
FIS105NL	1:50	4.7	0.5	175 µVS
FIS115NL	1:100	18	2.0	350 µVS
FIS125NL	1:200	76	4.5	700 µVS
FIS155NL	1:500	470	16.0	1750 µVS
FIS1105NL	1:1000	1900	50.0	3500 µVS

Notes:

L: Inductance: (1-3) tested at 10 KHz & 10 mV

V x τ: V = Rt x Is $\quad \tau = \frac{1}{2F}$

Rt (Ω): Recommended Terminating Resistance

Is (A): sec. current F(Hz): Frequency

* Contact Pulse for availability

Mechanicals

FISXXX

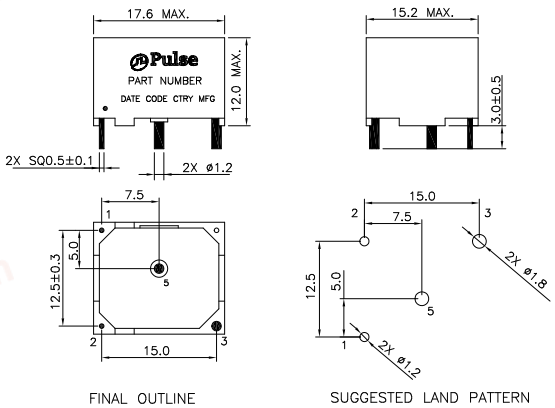

Schematics

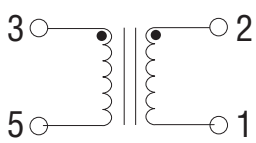

	FIS105NL/15NL/25NL/55NL	FIS1105NL
Weight	7.0 grams	8.0 grams
Tray	30/tray	34/tray

Dimension: mm

Unless otherwise specified, all tolerances are ± 0.50

For More Information:

Americas - prodinfo_power_americas@ yageo.com | **Europe -** prodinfo_power_emea@yageo.com | **Asia -** prodinfo_power_asia@yageo.com

Performance warranty of products offered on this data sheet is limited to the parameters specified. Data is subject to change without notice. Other brand and product names mentioned herein may be trademarks or registered trademarks of their respective owners. © Copyright, 2023. Pulse Electronics, Inc. All rights reserved.

Pulse a YAGEO company