chanhvinh.com

REVISION RECORD		
REV	DESCRIPTION	DRFT
A	A RELEASE	LYNN 09/21/15
B	CORRECT DIMENSION	RICKY 05/24/17
C	ADD MATERIAL INFORMATION	RICKY 10/23/18
D	ADD PIN NOTATION	KYLIN 02/12/19

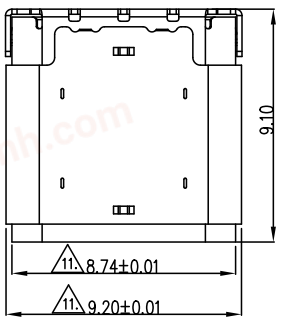

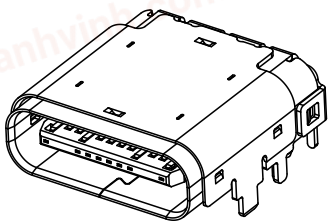

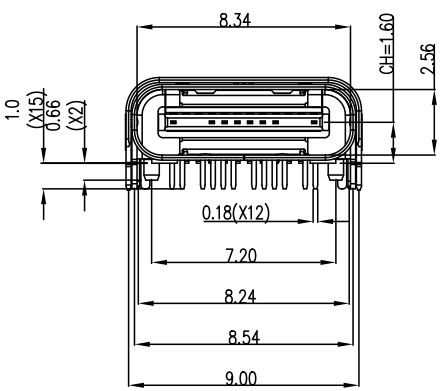

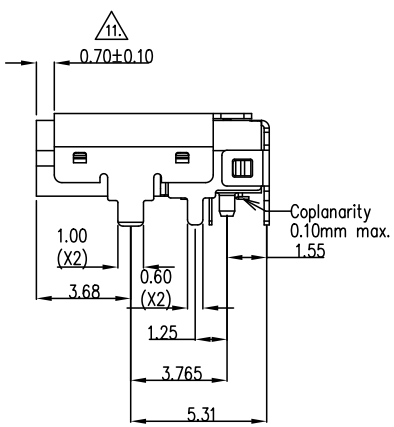

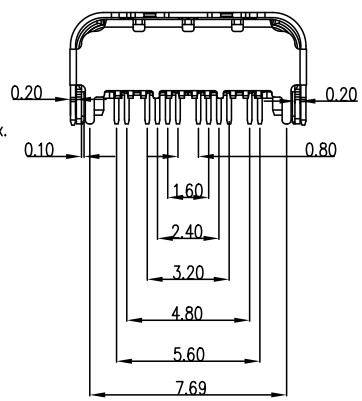

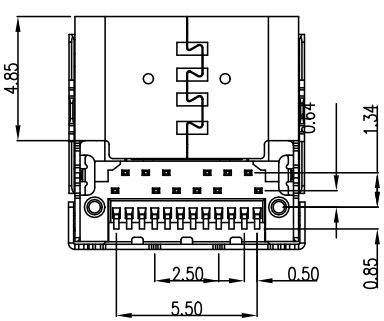

NOTES:

MATERIAL:

1. TERMINAL RAW MATERIAL: C18400
   PLATING: AU 0.8U" MIN ON CONTACT AREAR
2. PLASTIC: LCP1301, UL 94 V_0, (E106764)

ELECTRICAL CHARACTERISTICS:

1. LOW LEVEL CONTACT RESISTANCE:
   INITIAL: 40m
   AFTER : 10m Ω FOR ALL CONTACT MAX.
   Ω MAX. CHANGE.
2. DIELECTRIC WITHSTANDING VOLTAGE:
   100 VAC FOR 1 MINUTE SEA LEVEL.
3. INSULATION RESISTANCE:
   100M Ω MIN.
4. CURRENT RATING:
   VBUS AND GND CONTACTS RATED AT 1.25A EA.
   PARALLELED FOR A TOTAL OF 5A

MECHANICAL CHARACTERISTICS:

1. INSERTION FORCE: 20N MAX
2. EXTRACTION FORCE 1-1000 CYCLES 8N MIN. 20N MAX.
   EXTRACTION FORCE 1001-10000 CYCLES 6N MIN. 20N MAX.
3. DURABILITY : 10,000 CYCLES
4. PLATING OF CONTACT:
   GOLD FLASH ON CONTACT AREA.
5. OPERATING TEMPERATURE: -55℃ TO +85℃

PIN NO.	A1	A2	A3	A4	A5	A6	A7	A8	A9	A10	A11	A12
SIGNAL NAME	GND	SSTXp1	SSTXn1	VBUS	CC1	Dp1	Dn1	SBU1	VBUS	SSRXn2	SSRXp2	GND
PIN NO.	B12	B11	B10	B9	B8	B7	B6	B5	B4	B3	B2	B1
SIGNAL NAME	GND	SSRXp1	SSRXn1	VBUS	SBU2	Dn1	Dp1	CC2	VBUS	SSTXn2	SSTXp2	GND

DETACHED LISTS

MM (INCH)

TOLERANCES EXCEPT AS NOTED

MM	
.0 ± 0.25	±
.00 ± 0.20	±
.000 ± 0.10	±

ANGLES ± 1°

THIRD ANGLE PROJECTION

RoHS Compliant

Pulse Electronics

TITLE: USB TYPE - C CONN
RECEPTACLE - TOP MOUNT TYPE

DFTO :	LYNN	DRAWING NO.	CE8124-015-01	SIZE A3	REV D
DATE :	09/21/2015	/PART NO.	E8124-015-01		
SCALE :	1:1	DO NOT SCALE DRAWING		SHEET 1	OF 2

8 7 6 5 4 3 2 1

H G F E D C B A

chanhvinh.com

REVISION RECORD		
REV	DESCRIPTION	DRFT
A	A RELEASE	LYNN 09/21/15
B	CORRECT DIMENSION	RICKY 05/24/17
C	ADD MATERIAL INFORMATION	RICKY 10/23/18
D	ADD PIN NOTATION	KYLIN 02/12/19

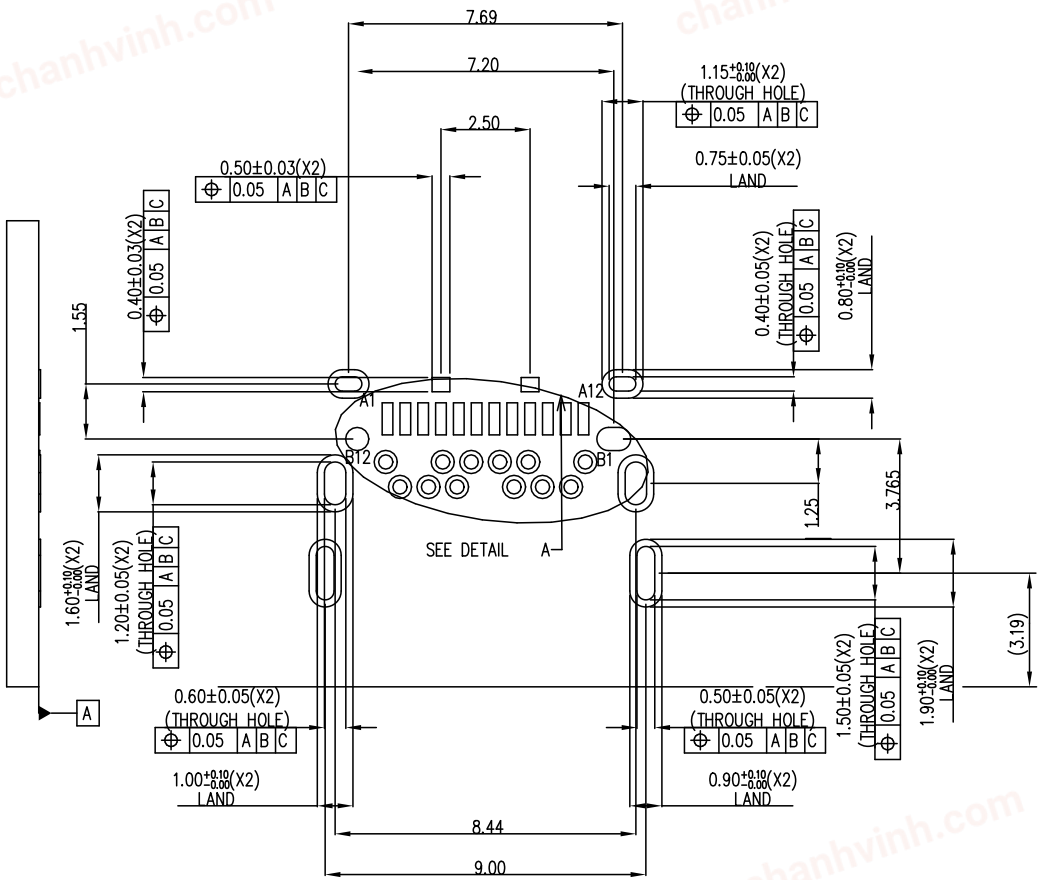

RECOMMENTED PCB LAYOUT
THICKNESS IS 0.9mm
TOLERANCE ± 0.05

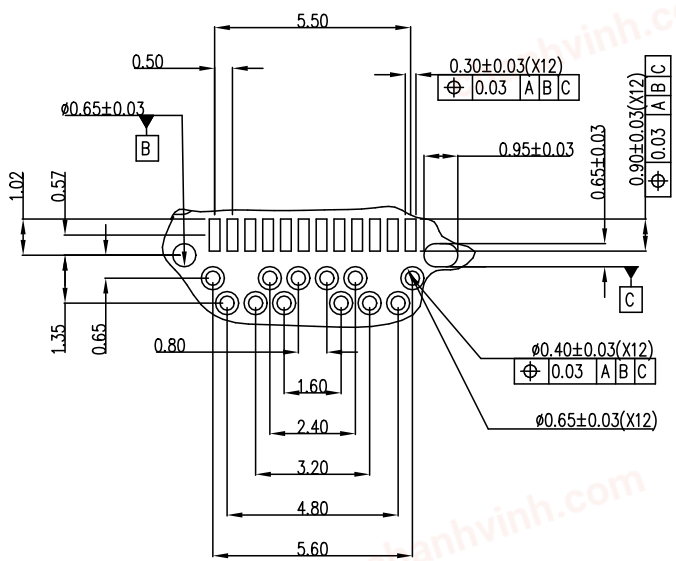

DETAIL A
SCALE 7:1

DETACHED LISTS

MM (INCH)
TOLERANCES EXCEPT AS NOTED
MM
.0 ± 0.25 ±
.00 ± 0.20 ±
.000 ± 0.10 ±
ANGLES ± 1°
THIRD ANGLE PROJECTION

RoHS Compliant

Pulse Electronics

TITLE: USB TYPE – C CONN
RECEPTACLE – TOP MOUNT TYPE

DFTO :	LYNN	DRAWING NO.	CE8124-015-01	SIZE A3	REV D
DATE :	09/21/2015	/PART NO.	E8124-015-01		
SCALE :	1:1	DO NOT SCALE DRAWING		SHEET 2 OF 2	