chanhvinh.com

Pulse
A YAGEO Company

TECHNICAL DATA SHEET

Description : 1608 2.4G&5-7GHz Diplexer

PART NUMBER: DPX1608LL60R2460A

Features:

- Compact size : 1.6x0.8x0.6mm
- RoHS compliant

Applications:

- WLAN, 802.11a/b/g/n/ax
- WiFi 6E
- ISM Band

ELECTRICAL SPECIFICATIONS

DESCRIPTION	VALUE	
Pass Band	Low Band	High Band
	2400~2500MHz	5170~7125MHz
Insertion Loss	0.50dB (Max)	0.9dB (Max)
Return Loss	12.0dB (Min)	10.0dB (Min)
Attenuation	28dB(Min).@4800~5000MHz 25dB(Min).@5170~7125MHz 30dB(Min).@7200~7500MHz 27dB(Min).@9600~10000MHz 20dB(Min).@12000~12500MHz	28dB(Min).@500~2300MHz 30dB(Min).@2300~2690MHz 10dB(Min).@3400~3800MHz 25dB(Min).@10340~14250MHz 20dB(Min).@15510~18500MHz 15dB(Min).@18500~21375MHz
Isolation	30dB(Min).@2400~2500MHz 25dB(Min).@4800~5950MHz	
Operating Temperature	-40 ~ 85℃	

In the effort to improve our products, we reserve the right to make changes judged to be necessary.
CONFIDENTIAL AND PROPRIETARY INFORMATION
This document contains confidential and proprietary information of Pulse Electronics, Inc. (Pulse) and is protected by copyright, trade secret and other state and federal laws. Its receipt or possession does not convey any rights to reproduce, disclose its contents, or to manufacture, use or sell anything it may describe. Reproduction, disclosure or use without specific written authorization of Pulse is strictly forbidden.
For more information:

RoHS COMPLIANT

Pulse Worldwide Headquarters
15255 Innovation Drive #100
San Diego, CA 92128
USA
Tel:1-858-674-8100

Pulse/Larsen Antennas
18110 SE 34th St Bldg 2 Suite 250
Vancouver, WA 98683
USA
Tel: 1-360-944-7551

Europe Headquarters
Pulse GmbH & Do, KG
Zeppelinstrasse 15
Herrenberg, Germany
Tel: 49 7032 7806 0

Pulse (Suzhou) Wireless Products Co, Inc.
99 Huo Ju Road(#29 Bldg,4th Phase
Suzhou New District
Jiangsu Province, Suzhou 215009 PR China
Tel: 86 512 6807 9998

chanhvinh.com

Pulse A YAGEO Company

TECHNICAL DATA SHEET

Description: 1608 2.4G&5-7GHz Diplexer

PART NUMBER: DPX1608LL60R2460A

MECHANICAL DIMENSION

Outline

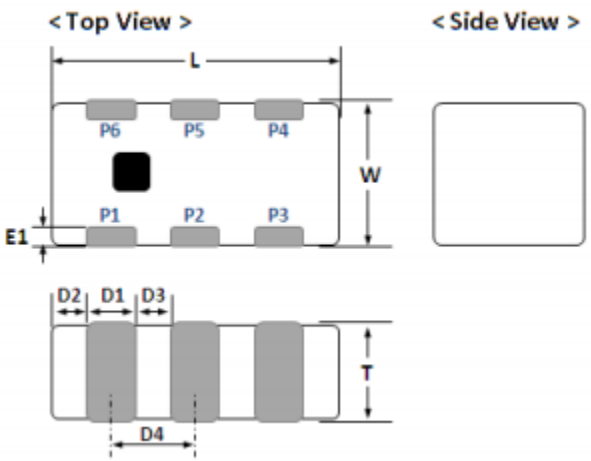

Termination

Terminal name	Function
P1	GND
P2	Common
P3	GND
P4	Low band
P5	GND
P6	High band

Mechanical

	Dimension
L (mm)	1.60±0.15
W(mm)	0.80±0.15
T(mm)	0.60±0.15
D1(mm)	0.25±0.10
D2(mm)	0.125±0.10
D3(mm)	0.30±0.10
D4(mm)	0.55±0.10
E1(mm)	0.15±0.10

Reference design of EVB

Recommended Land Pattern

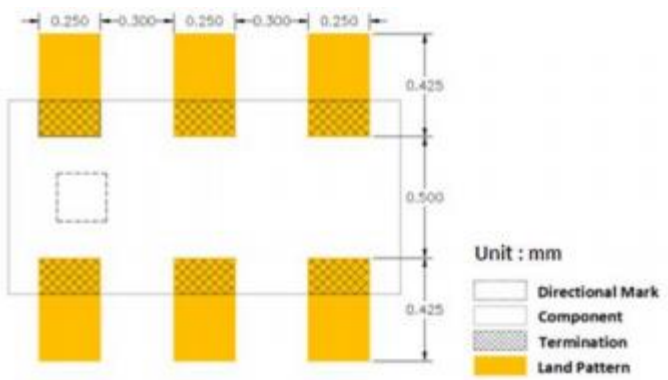

Recommended PCB Pattern



Line width should be designed to match 50Ω characteristic impedance, depending on PCB material and thickness.

In the effort to improve our products, we reserve the right to make changes judged to be necessary.
CONFIDENTIAL AND PROPRIETARY INFORMATION
This document contains confidential and proprietary information of Pulse Electronics, Inc. (Pulse) and is protected by copyright, trade secret and other state and federal laws. Its receipt or possession does not convey any rights to reproduce, disclose its contents, or to manufacture, use or sell anything it may describe. Reproduction, disclosure or use without specific written authorization of Pulse is strictly forbidden.

RoHS COMPLIANT

chanhvinh.com

Pulse A YAGEO Company

TECHNICAL DATA SHEET

Description: 1608 2.4G&5-7GHz Diplexer

PART NUMBER: DPX1608LL60R2460A

MEASURING DIAGRAM

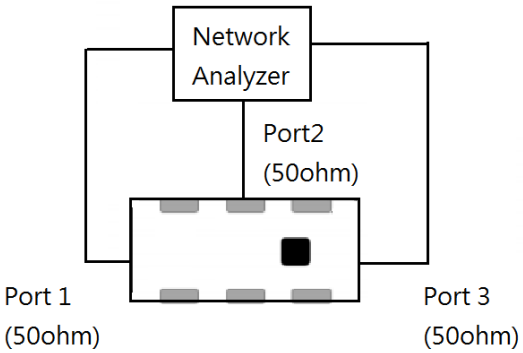

Test Instrument：
Agilent E5071C Network Analyzer or equivalent.

ELECTRICAL PERFORMANCES

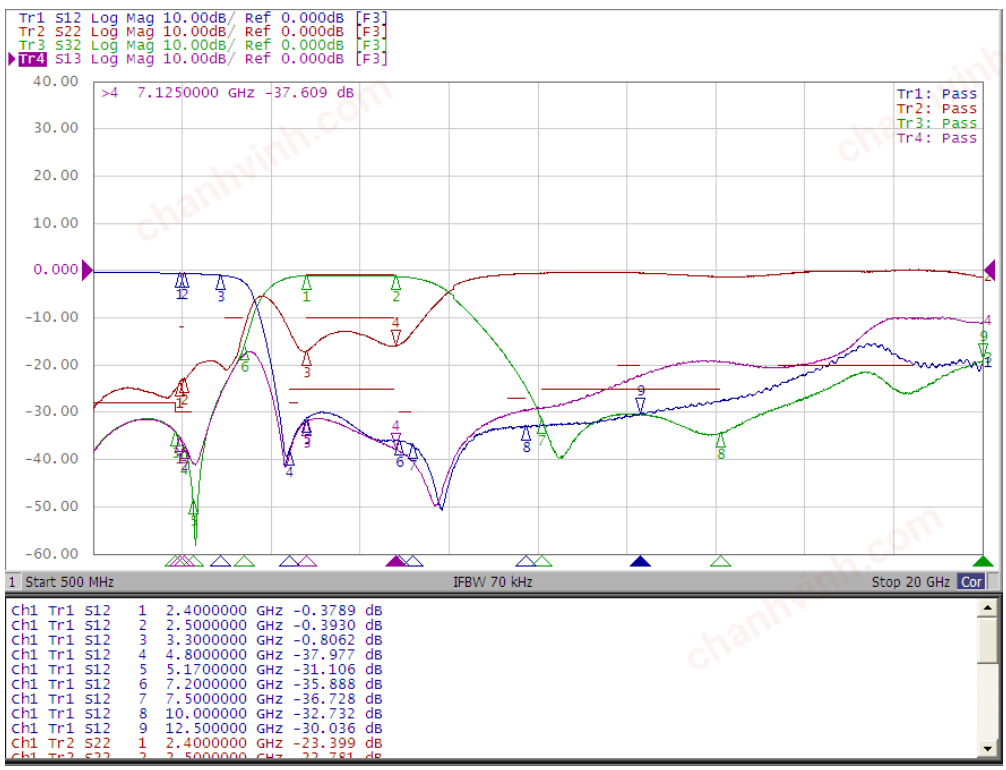

- Measured on Agilent E5071C Network Analyzer

In the effort to improve our products, we reserve the right to make changes judged to be necessary.
CONFIDENTIAL AND PROPRIETARY INFORMATION
This document contains confidential and proprietary information of Pulse Electronics, Inc. (Pulse) and is protected by copyright, trade secret and other state and federal laws. Its receipt or possession does not convey any rights to reproduce, disclose its contents, or to manufacture, use or sell anything it may describe. Reproduction, disclosure or use without specific written authorization of Pulse is strictly forbidden.

RoHS COMPLIANT

chanhvinh.com

Pulse A YAGEO Company

TECHNICAL DATA SHEET

Description: 1608 2.4G&5-7GHz Diplexer

PART NUMBER: DPX1608LL60R2460A

REVISION HISTORY

Revision	Date	Description
Version 1	Oct. 06, 2020	- New issue
Version 2	Jan. 29, 2021	- Update electrical requirement
Version 3	Jan. 07, 2023	- Update electrical requirement

In the effort to improve our products, we reserve the right to make changes judged to be necessary.
CONFIDENTIAL AND PROPRIETARY INFORMATION
This document contains confidential and proprietary information of Pulse Electronics, Inc. (Pulse) and is protected by copyright, trade secret and other state and federal laws. Its receipt or possession does not convey any rights to reproduce, disclose its contents, or to manufacture, use or sell anything it may describe. Reproduction, disclosure or use without specific written authorization of Pulse is strictly forbidden.

RoHS COMPLIANT