chanhvinh.com

Pulse
A YAGEO Company

TECHNICAL DATA SHEET

Description: 1608 Diplexer

PART NUMBER: DPX1608LKU5R2455A

Features:

- Compact Size
- Low loss
- High Soldering Heat Resistance

Applications:

- For wireless application

ELECTRICAL SPECIFICATIONS

Low-Band

Item	Frequency Range (MHz)	Min.	Typ.	Max.
Insertion Loss (dB)	2400~2500	-	0.66	0.75
Insertion Loss (dB) at -40~85°C	2400~2500	-	-	0.90
Return Loss (dB)	2400~2500	13	22.7	-
Attenuation (dB)	1200~1250	10	16.1	-
	1570~1600	10	16.2	-
	4800~6000	25	32.0	-
	7200~7500	25	34.6	-
	9600~10000	25	41.5	-

In the effort to improve our products, we reserve the right to make changes judged to be necessary.
CONFIDENTIAL AND PROPRIETARY INFORMATION
This document contains confidential and proprietary information of Pulse Electronics, Inc. (Pulse) and is protected by copyright, trade secret and other state and federal laws. Its receipt or possession does not convey any rights to reproduce, disclose its contents, or to manufacture, use or sell anything it may describe. Reproduction, disclosure or use without specific written authorization of Pulse is strictly forbidden.
For more information:

RoHS COMPLIANT

Pulse Worldwide Headquarters
15255 Innovation Drive #100
San Diego, CA 92128
USA
Tel:1-858-674-8100

Pulse/Larsen Antennas
18110 SE 34th St Bldg 2 Suite 250
Vancouver, WA 98683
USA
Tel: 1-360-944-7551

Europe Headquarters
Pulse GmbH & Do, KG
Zeppelinstrasse 15
Herrenberg, Germany
Tel: 49 7032 7806 0

Pulse (Suzhou) Wireless Products Co, Inc.
99 Huo Ju Road(#29 Bldg,4th Phase
Suzhou New District
Jiangsu Province, Suzhou 215009 PR China
Tel: 86 512 6807 9998

chanhvinh.com

Pulse A YAGEO Company

TECHNICAL DATA SHEET

Description: 1608 Diplexer

PART NUMBER: DPX1608LKU5R2455A

ELECTRICAL SPECIFICATIONS

High-Band

Item	Frequency Range (MHz)	Min.	Typ.	Max.
Insertion Loss (dB)	4900~5100	-	1.16	1.5
	5150~5950	-	0.99	1.2
Insertion Loss (dB) at -40~85°C	4900~5100	-	-	1.7
	5150~5950	-	-	1.4
Return Loss (dB)	4900~5100	13	19.7	-
	5150~5950	13	21.0	-
Attenuation (dB)	1610~2000	30	45.0	-
	2400~2500	28	42.0	-
	3300~3800	30	34.6	-
	9800~12000	20	30.1	-
	14200~18000	20	28.2	-

Common

Item	Frequency Range (MHz)	Min.	Typ.	Max.
Return Loss (dB)	2400~2500	13	24.2	-
	4900~5950	13	20.1	-

Isolation

Item	Frequency Range (MHz)	Min.	Typ.	Max.
Low to High (dB)	2400~2500	30	42.5	-
	4800~6000	25	31.7	-
	15000~18000	18	20.9	-

Operating Temperature Range：-40~85°C
Power Capacity：3W max.

In the effort to improve our products, we reserve the right to make changes judged to be necessary.
CONFIDENTIAL AND PROPRIETARY INFORMATION
This document contains confidential and proprietary information of Pulse Electronics, Inc. (Pulse) and is protected by copyright, trade secret and other state and federal laws. Its receipt or possession does not convey any rights to reproduce, disclose its contents, or to manufacture, use or sell anything it may describe. Reproduction, disclosure or use without specific written authorization of Pulse is strictly forbidden.

RoHS COMPLIANT

chanhvinh.com

Pulse A YAGEO Company

TECHNICAL DATA SHEET

Description: 1608 Diplexer

PART NUMBER: DPX1608LKU5R2455A

MECHANICAL DIMENSION

Outline

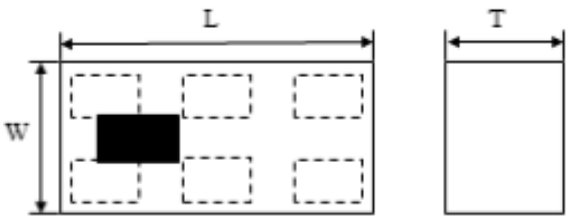

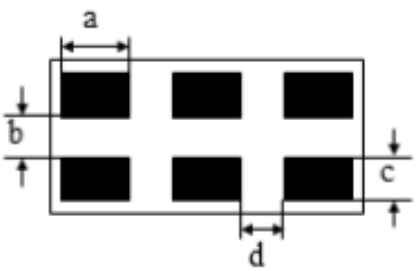

Dimension

L	W	T	A
1.60±0.10	0.80±0.10	0.70 max.	0.35±0.05
B	C	D	
0.22±0.05	0.225±0.05	0.22±0.05	

NOTE：Dimensions in mm.

Termination

Top View

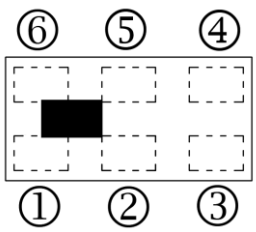

Terminal name	Function
1	Low band
2	GND
3	High band
4	GND
5	Common
6	GND

Reference design of EVB

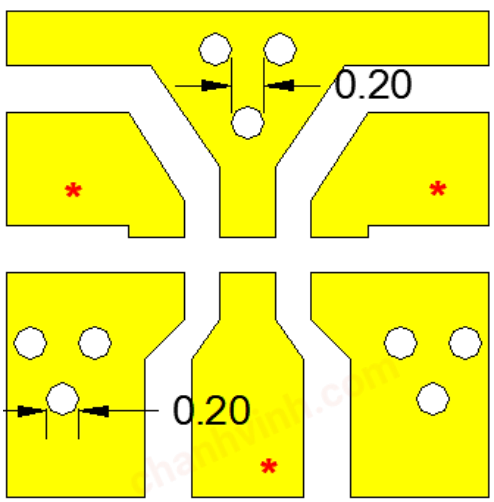

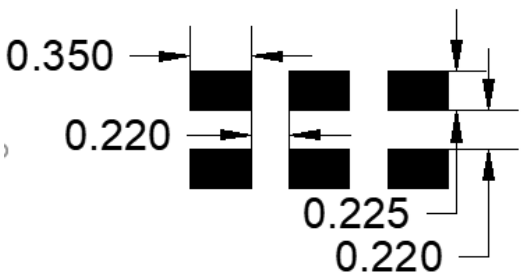

Unit : mm

Line width should be designed to match 50Ω characteristic impedance, depending on PCB material and thickness.

In the effort to improve our products, we reserve the right to make changes judged to be necessary.
CONFIDENTIAL AND PROPRIETARY INFORMATION
This document contains confidential and proprietary information of Pulse Electronics, Inc. (Pulse) and is protected by copyright, trade secret and other state and federal laws. Its receipt or possession does not convey any rights to reproduce, disclose its contents, or to manufacture, use or sell anything it may describe. Reproduction, disclosure or use without specific written authorization of Pulse is strictly forbidden.

RoHS COMPLIANT

chanhvinh.com

Pulse A YAGEO Company

TECHNICAL DATA SHEET

Description: 1608 Diplexer

PART NUMBER: DPX1608LKU5R2455A

MEASURING DIAGRAM

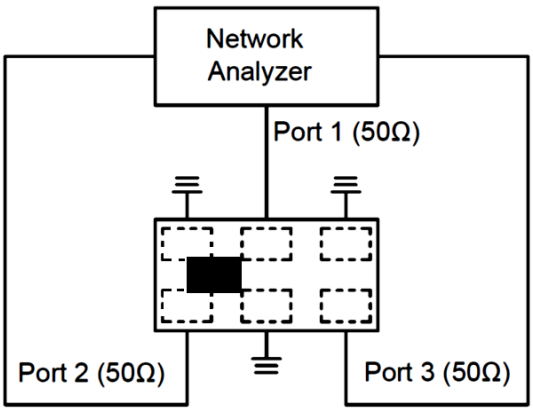

Test Instrument：
Agilent E5071C Network Analyzer or equivalent.

ELECTRICAL PERFORMANCES

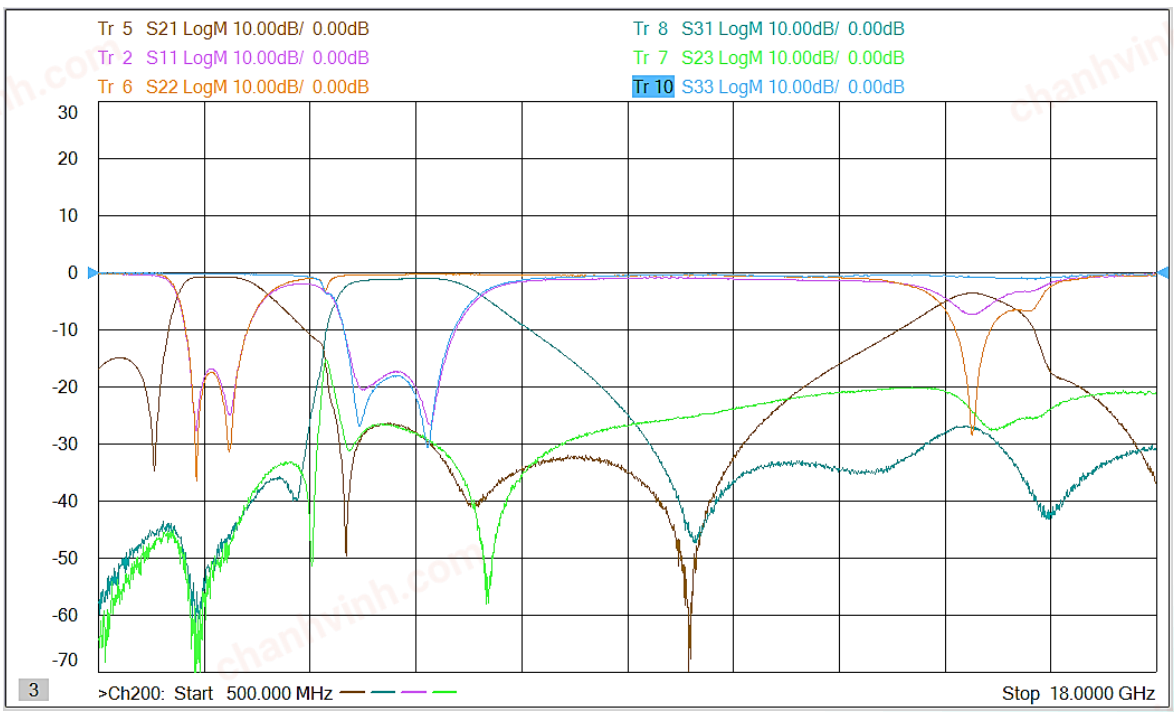

In the effort to improve our products, we reserve the right to make changes judged to be necessary.
CONFIDENTIAL AND PROPRIETARY INFORMATION
This document contains confidential and proprietary information of Pulse Electronics, Inc. (Pulse) and is protected by copyright, trade secret and other state and federal laws. Its receipt or possession does not convey any rights to reproduce, disclose its contents, or to manufacture, use or sell anything it may describe. Reproduction, disclosure or use without specific written authorization of Pulse is strictly forbidden.

RoHS COMPLIANT

chanhvinh.com

Pulse A YAGEO Company

TECHNICAL DATA SHEET

Description: 1608 Diplexer

PART NUMBER: DPX1608LKU5R2455A

PACKING SPECIFICATION

Peel-off force

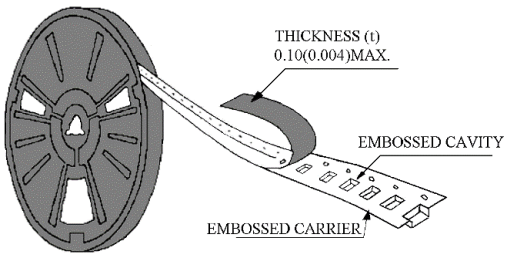

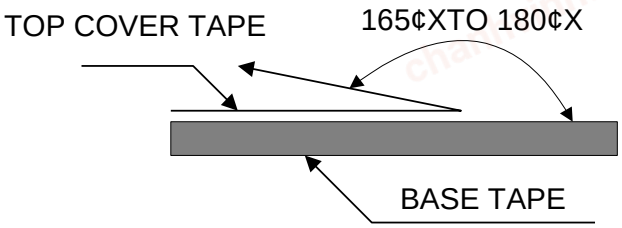

The force for peeling of cover tape is 10 grams in the arrow direction.

Dimension (Unit: mm)

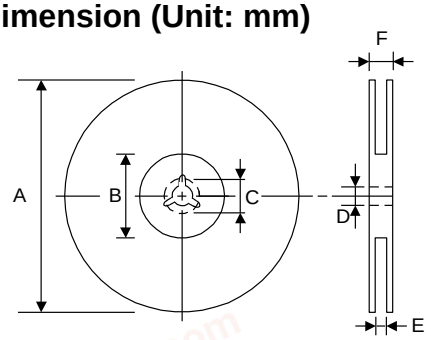

TYPE	A	B	C	D	E	F
8 mm	178±1	60+0.5 -0	-	13±0.2	9±0.5	12±0.5
12 mm	178±0.3	60±0.2	19.3±0.1	13.5±0.1	13.6±0.1	-

Taping quantity

SERIES	5824 5724	5320 5220	4532	4516	3225	3216 2520	2012 1608	1005 0605
PCS/Reel	5000	3000	1000	2000	2500	3000	4000	10000

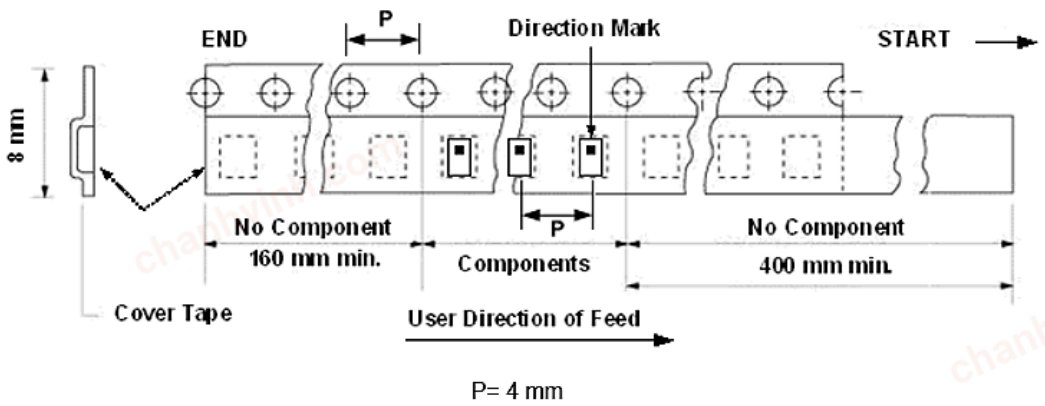

In the effort to improve our products, we reserve the right to make changes judged to be necessary.
CONFIDENTIAL AND PROPRIETARY INFORMATION
This document contains confidential and proprietary information of Pulse Electronics, Inc. (Pulse) and is protected by copyright, trade secret and other state and federal laws. Its receipt or possession does not convey any rights to reproduce, disclose its contents, or to manufacture, use or sell anything it may describe. Reproduction, disclosure or use without specific written authorization of Pulse is strictly forbidden.

RoHS COMPLIANT

chanhvinh.com

TECHNICAL DATA SHEET

Description: 1608 Diplexer

PART NUMBER: DPX1608LKU5R2455A

REVISION HISTORY

Revision	Date	Description
Version 1	Mar. 24, 2022	- New issue

chanhvinh.com

CONFIDENTIAL AND PROPRIETARY INFORMATION
This document contains confidential and proprietary information of Pulse Electronics, Inc. (Pulse) and is protected by copyright, trade secret and other state and federal laws. Its receipt or possession does not convey any rights to reproduce, disclose its contents, or to manufacture, use or sell anything it may describe. Reproduction, disclosure or use without specific written authorization of Pulse is strictly forbidden.