chanhvinh.com

Pulse
A YAGEO Company

TECHNICAL DATA SHEET

Description: 1608 Diplexer

PART NUMBER: DPX1608LKU2R2460L

Features:

- Compact size
- Low loss
- High Soldering Heat Resistance

Applications:

- WiFi 6E

ELECTRICAL SPECIFICATIONS

Low-Band

Item	Frequency Range (MHz)	Min.	Typ.	Max.
Insertion loss (dB)	2400~2500	-	0.43	0.65
Return loss (dB)	2400~2500	10	18.6	-
Attenuation (dB)	4800~7125	31	33.5	-
	7200~7500	35	38.1	-
	7700~7950	30	33.1	-
	7500~12000	15	33.1	-

High-Band

Item	Frequency Range (MHz)	Min.	Typ.	Max.
Insertion loss (dB)	5150~5875	-	0.55	1.25
	5875~7125	-	0.7	1.25
Return loss (dB)	5150~7125	10	-	-
Attenuation (dB)	100~1000	35	56.7	-
	1000~2300	35	48.9	-
	2400~2500	35	44.7	-
	2700~3500	15	19.2	-
	9800~14250	25	30.2	-
	14700~21375	12	32.9	-

In the effort to improve our products, we reserve the right to make changes judged to be necessary.

RoHS COMPLIANT

CONFIDENTIAL AND PROPRIETARY INFORMATION
This document contains confidential and proprietary information of Pulse Electronics, Inc. (Pulse) and is protected by copyright, trade secret and other state and federal laws. Its receipt or possession does not convey any rights to reproduce, disclose its contents, or to manufacture, use or sell anything it may describe. Reproduction, disclosure or use without specific written authorization of Pulse is strictly forbidden.

For more information:

Pulse Worldwide Headquarters
15255 Innovation Drive #100
San Diego, CA 92128
USA
Tel:1-858-674-8100

Pulse/Larsen Antennas
18110 SE 34th St Bldg 2 Suite 250
Vancouver, WA 98683
USA
Tel: 1-360-944-7551

Europe Headquarters
Pulse GmbH & Do, KG
Zeppelinstrasse 15
Herrenberg, Germany
Tel: 49 7032 7806 0

Pulse (Suzhou) Wireless Products Co, Inc.
99 Huo Ju Road(#29 Bldg,4th Phase
Suzhou New District
Jiangsu Province, Suzhou 215009 PR China
Tel: 86 512 6807 9998

chanhvinh.com

Pulse A YAGEO Company

TECHNICAL DATA SHEET

Description: 1608 Diplexer

PART NUMBER: DPX1608LKU2R2460L

ELECTRICAL SPECIFICATIONS

Common

Item	Frequency Range (MHz)	Min.	Typ.	Max.
Return loss (dB)	2400~2500	10	18.5	-
	5150~7125	10	-	-

Isolation

Item	Frequency Range (MHz)	Min.	Typ.	Max.
Isolation (dB)	4800~5000	36	38.4	-
	5150~7125	33	37.7	-
	7200~7500	33	36.5	-
	9800~14250	20	37.2	-
	14700~21375	10	14.9	-

*Impedance for high-band = Match to client's chipset
Operating Temperature Range：-40~85°C
Power Capacity：3W max.

In the effort to improve our products, we reserve the right to make changes judged to be necessary.
CONFIDENTIAL AND PROPRIETARY INFORMATION
This document contains confidential and proprietary information of Pulse Electronics, Inc. (Pulse) and is protected by copyright, trade secret and other state and federal laws. Its receipt or possession does not convey any rights to reproduce, disclose its contents, or to manufacture, use or sell anything it may describe. Reproduction, disclosure or use without specific written authorization of Pulse is strictly forbidden.

RoHS COMPLIANT

chanhvinh.com

Pulse A YAGEO Company

TECHNICAL DATA SHEET

Description: 1608 Diplexer

PART NUMBER: DPX1608LKU2R2460L

MECHANICAL DIMENSION

Outline

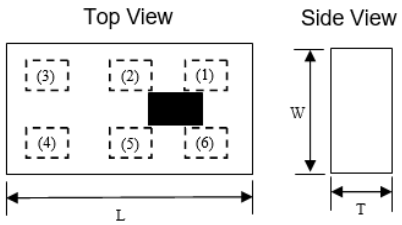

Dimension

L	W	T	a
1.60±0.10	0.80±0.10	0.70 max.	0.35±0.05
b	c	d	
0.22±0.05	0.225±0.05	0.22±0.05	

NOTE：Dimensions in mm.

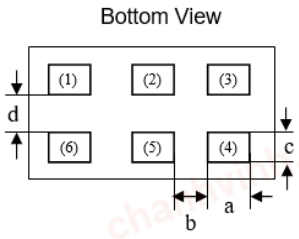

Termination

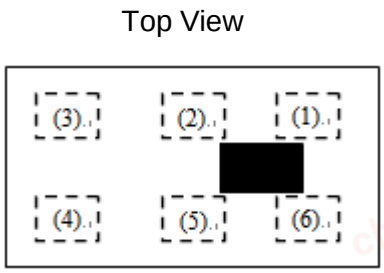

Terminal name	Function
1	High band
2	GND
3	Low band
4	GND
5	Common
6	GND

Reference design of EVB

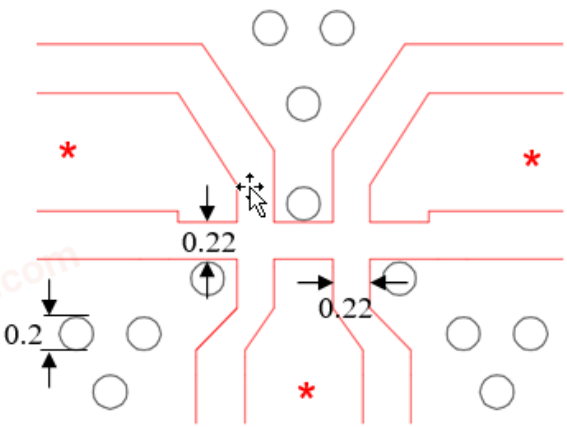

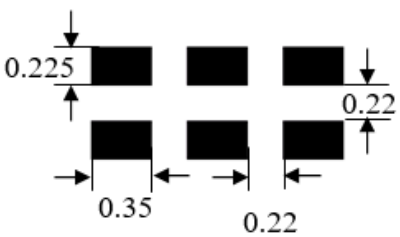

Unit：mm

*Line width should be designed to match 50Ω characteristic impedance, depending on PCB material and thickness.

In the effort to improve our products, we reserve the right to make changes judged to be necessary.
CONFIDENTIAL AND PROPRIETARY INFORMATION
This document contains confidential and proprietary information of Pulse Electronics, Inc. (Pulse) and is protected by copyright, trade secret and other state and federal laws. Its receipt or possession does not convey any rights to reproduce, disclose its contents, or to manufacture, use or sell anything it may describe. Reproduction, disclosure or use without specific written authorization of Pulse is strictly forbidden.

RoHS COMPLIANT

chanhvinh.com

Pulse A YAGEO Company

TECHNICAL DATA SHEET

Description: 1608 Diplexer

PART NUMBER: DPX1608LKU2R2460L

MEASURING DIAGRAM

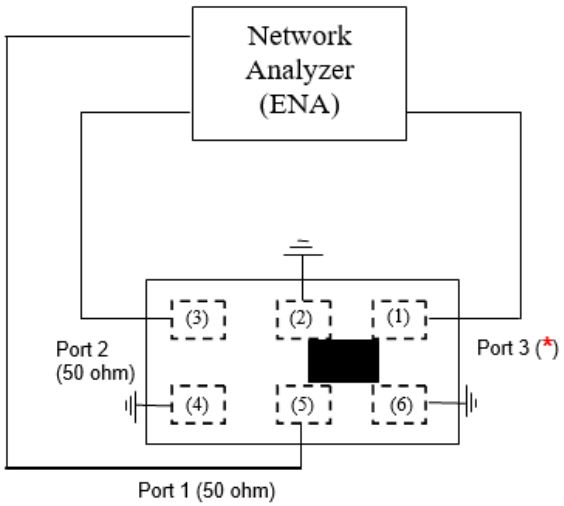

Test Instrument：
Agilent E5071C Network Analyzer or equivalent.
*Impedance for high-band = Match to client's chipset

ELECTRICAL PERFORMANCES

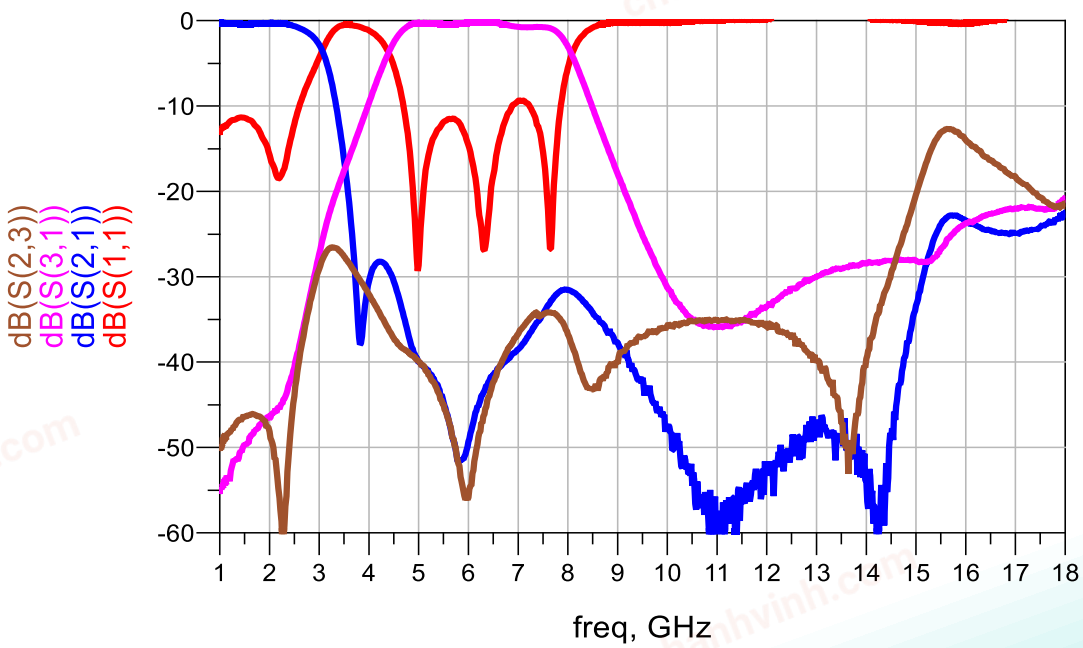

In the effort to improve our products, we reserve the right to make changes judged to be necessary.
CONFIDENTIAL AND PROPRIETARY INFORMATION
This document contains confidential and proprietary information of Pulse Electronics, Inc. (Pulse) and is protected by copyright, trade secret and other state and federal laws. Its receipt or possession does not convey any rights to reproduce, disclose its contents, or to manufacture, use or sell anything it may describe. Reproduction, disclosure or use without specific written authorization of Pulse is strictly forbidden.

RoHS COMPLIANT

chanhvinh.com

Pulse A YAGEO Company

TECHNICAL DATA SHEET

Description: 1608 Diplexer

PART NUMBER: DPX1608LKU2R2460L

PACKING SPECIFICATION

Peel-off force

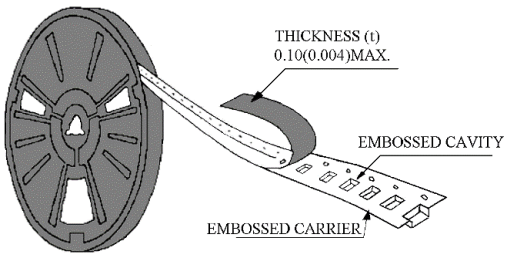

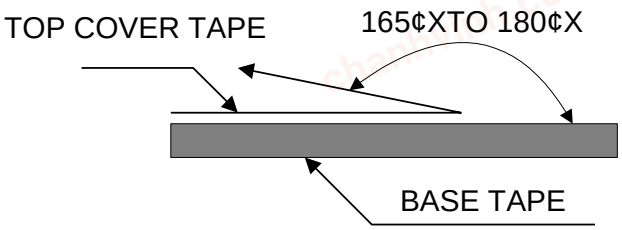

The force for peeling of cover tape is 10 grams in the arrow direction.

Dimension (Unit: mm)

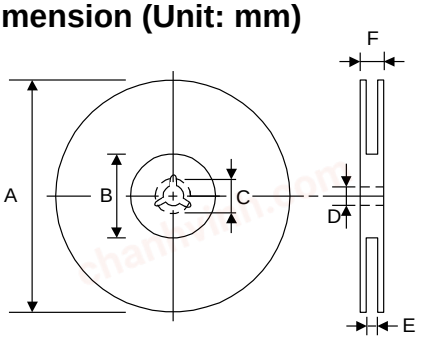

TYPE	A	B	C	D	E	F
8 mm	178±1	60+0.5 -0	-	13±0.2	9±0.5	12±0.5
12 mm	178±0.3	60±0.2	19.3±0.1	13.5±0.1	13.6±0.1	-

Taping quantity

SERIES	5824 5724	5320 5220	4532	4516	3225	3216 2520	2012 1608	1005 0605
PCS/Reel	5000	3000	1000	2000	2500	3000	4000	10000

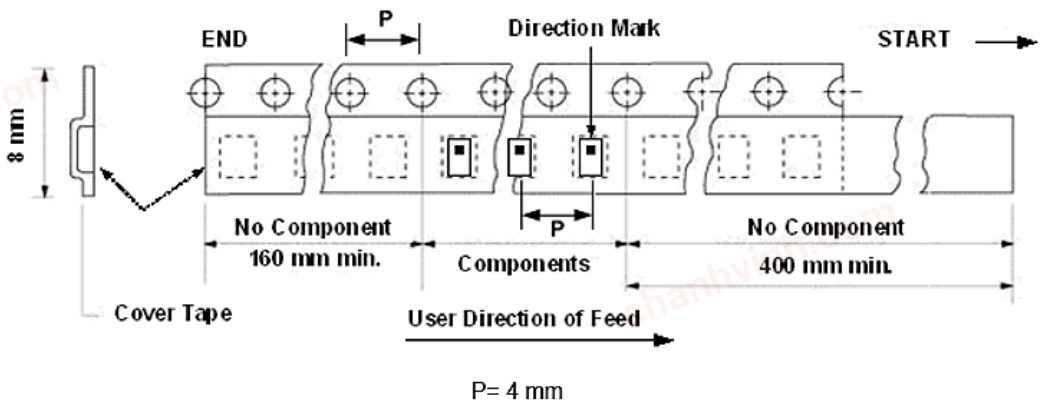

In the effort to improve our products, we reserve the right to make changes judged to be necessary.
CONFIDENTIAL AND PROPRIETARY INFORMATION
This document contains confidential and proprietary information of Pulse Electronics, Inc. (Pulse) and is protected by copyright, trade secret and other state and federal laws. Its receipt or possession does not convey any rights to reproduce, disclose its contents, or to manufacture, use or sell anything it may describe. Reproduction, disclosure or use without specific written authorization of Pulse is strictly forbidden.

RoHS COMPLIANT

chanhvinh.com

Pulse
A YAGEO Company

TECHNICAL DATA SHEET

Description: 1608 Diplexer

PART NUMBER: DPX1608LKU2R2460L

REVISION HISTORY

Revision	Date	Description
Version 1	May. 02, 2022	- New issue.
Version 2	Aug. 02, 2022	- Updated electrical specifications.

chanhvinh.com

RoHS COMPLIANT

CONFIDENTIAL AND PROPRIETARY INFORMATION
This document contains confidential and proprietary information of Pulse Electronics, Inc. (Pulse) and is protected by copyright, trade secret and other state and federal laws. Its receipt or possession does not convey any rights to reproduce, disclose its contents, or to manufacture, use or sell anything it may describe. Reproduction, disclosure or use without specific written authorization of Pulse is strictly forbidden.