chanhvinh.com

DC-DC Converters (1.5kVdc, 3kV and 6kV Isolation) 2W SIP

DKA/DKB/HBA2- series

Pulse
a YAGEO company

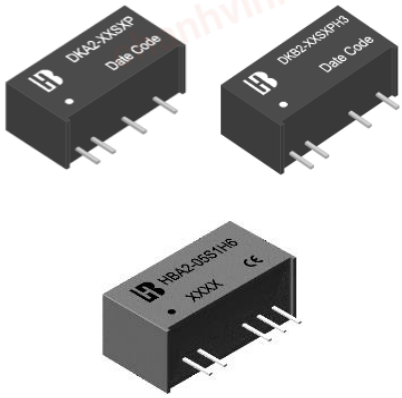

- *Input Voltage Range: 5V, 12V, 15V and 24V (+/-10%)*
- *Output Voltage Range: 5V to 24V, Single and Dual (+/-Vout)*
- *Power Level: 2W*
- *Isolation: 1.5kVdc, 3kVdc and 6kVdc*
- *Efficiency : up to 85% , no heatsinks required*
- *Operating Temperature Range: -40°C to +105°C*
- *Additional Features:*
  - *IEC/EN 62368-1 Approved*
  - *Low Ripple and Noise,*
  - *Thermal Shut-Down*

Electrical Specification @ 25°C (For DKA 1.5K Vdc Isolation Op: -40°C to +105°C)

Model Number	Input Voltage Range(V)	Output Voltage (V)	Output Current (mA)	Input Current (mA) Typ.		Eff .(%) Typ.	Capacitive Load, max. (uF)
			Full Load	No Load	Full Load		
DKA2-05S1P	4.5-5.5 Nominal:5	5	400	35	500	80	47
DKA2-05S2P		12	166	35	475	84	22
DKA2-05D2P		±12	±83	35	475	84	10/10
DKA2-05D3P		±15	±66	35	475	84	4.7/4.7
DKA2-12S2P	10.8-13.2 Nominal:12	12	166	15	198	84	22
DKA2-12D2P		±12	±83	15	198	84	10/10
DKA2-24D3P	21.6-26.4 Nominal:24	±15	±66	8	99	84	10/10

Electrical Specification @ 25°C (For DKB 3K Vdc Isolation Op: -40°C to +105°C)

Model Number	Input Voltage Range(V)	Output Voltage(V)	Output Current (mA)	Input Current (mA) Typ.		Eff .(%) Typ.	Capacitive Load, max. (uF)
			Full. Load	No Load	Full Load		
DKB2-05S3H3	4.5-5.5 Nominal:5	15	133	35	475	84	22
DKB2-12S1H3	10.8-13.2 Nominal:12	5	400	15	208	80	47
DKB2-24S5H3	21.6-26.4 Nominal:24	24	83	8	99	84	10
DKB2-05D3PH3	4.5-5.5 Nominal:5	±15	±66	35	475	84	10/10
DKB2-12D2PH3	10.8-13.2 Nominal:12	±12	±83	15	198	84	10/10

chanhvinh.com

DC-DC Converters (1.5kVdc, 3kV and 6kV Isolation) 2W SIP

DKA/DKB/HBA2- series

Pulse a YAGEO company

Electrical Specification @ 25°C (For HBA2 6K Vdc Isolation Op: -40°C to +105°C)							
Model Number	Input Voltage Range(V)	Output Voltage (V)	Output Current (mA)	Input Current (mA)		Eff .(%)	Capacitive Load, max. (uF)
			Full Load	No Load	Full Load		
HBA2-12S1H6	10.8 ~ 13.2 Nominal: 12	5	400	30	208	80	1200
HBA2-12D2H6		±12	±85	30	202	84	±330
HBA2-15SAH6	13.5 ~ 16.5 Nominal: 15	9	222	25	160	83	1200
HBA2-15S3H6		15	132	25	155	85	680
HBA2-24S3H6	21.6 ~ 26.4 Nominal: 24	15	132	20	104	79	680
HBA2-24D2H6		±12	±85	20	106	80	±330
HBA2-24D3H6		±15	±66	20	103	80	±330
HBA2-12Y1H6	10.8 ~ 13.2 Nominal: 12	+15/-5	+80/-40	30	143	82	+220/-220
HBA2-12Y2H6		+15/-8	+100/-80	30	213	84	+220/-220
HBA2-12Y3H6		+20/-5	+50/-200 ±80	30	200	83	+220/-220
HBA2-24Y1H6	21.6 ~ 26.4 Nominal: 24	+15/-5	+80/-40	10	71	82	+220/-220
HBA2-24Y3H6		+20/-5	+50/-200 ±80	20	99	85	+220/-220

Process and Materials

1. Storage Temperature: -55°C to +125°C
2. Compliance to J-STD:
   A. J-STD-002: Solderability of Dipping at 255~260°C
   B. J-STD-020: Moisture Sensitive Level 1
3. All parts are packaged in tubes - see pages 4 and 5 for details
4. For full electrical characteristics, curves and applications, please refer to the detailed specification sheets available on request
5. Lead Frame: Cooper Alloy
   Underplated: Half Hard Ductile Nickel 40-118" (1.0 -3.0um)
   Over plated: 100% Tin electro-deposited per 240~400u"Min(6~10um)
   Finish: Matte finish 100% Tin solder

chanhvinh.com

Mechanical

DKA2-P

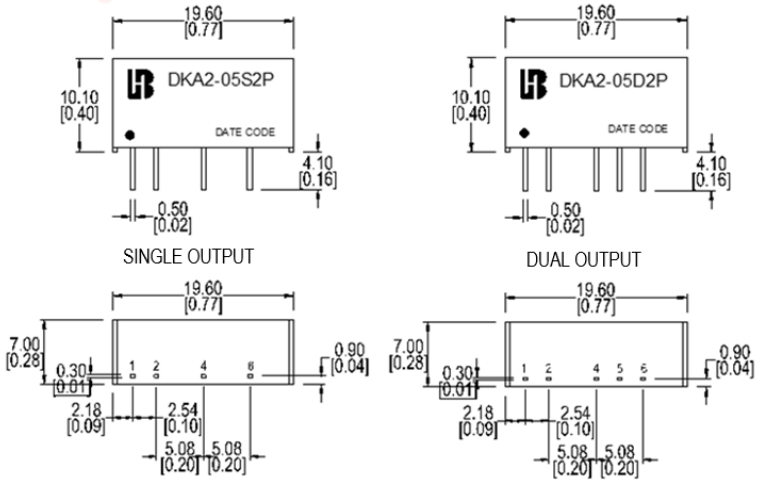

	DKA2-xxXxP	
PIN	Single	Dual
1	+Vin	+Vin
2	-Vin	-Vin
4	-Vout	-Vout
5	No Pin	Common
6	+Vout	+Vout

Unit: mm (inch for reference only)
Pin Section tolerances +/-0.1
General tolerances +/-0.5

DKB2H3/DKB2PH3

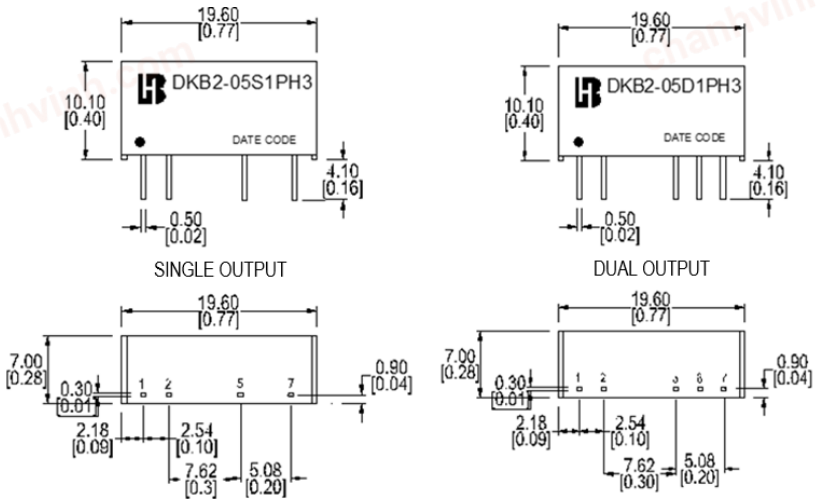

	DKB2-xxXxH3/PH3	
PIN	Single	Dual
1	+Vin	+Vin
2	-Vin	-Vin
5	-Vout	-Vout
6	No Pin	Common
7	+Vout	+Vout

Unit: mm (inch for reference only)
Pin Section tolerances +/-0.1
General tolerances +/-0.5

HBA2

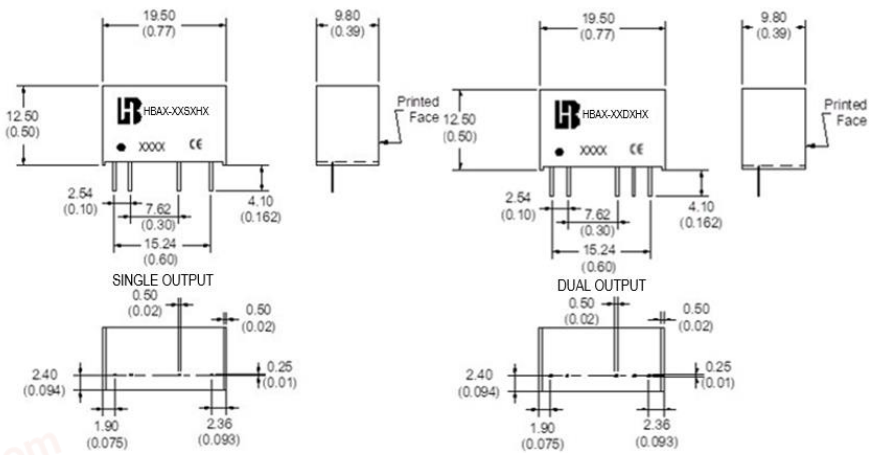

	HBA2-xxXxHX	
PIN	Single	Dual
1	+Vin	+Vin
2	-Vin	-Vin
5	-Vout	-Vout
6	No Pin	Common
7	+Vout	+Vout

Unit: mm (inch for reference only)
Pin Section tolerances +/-0.1
General tolerances +/-0.5

chanhvinh.com

Wave Soldering Temperature Curve

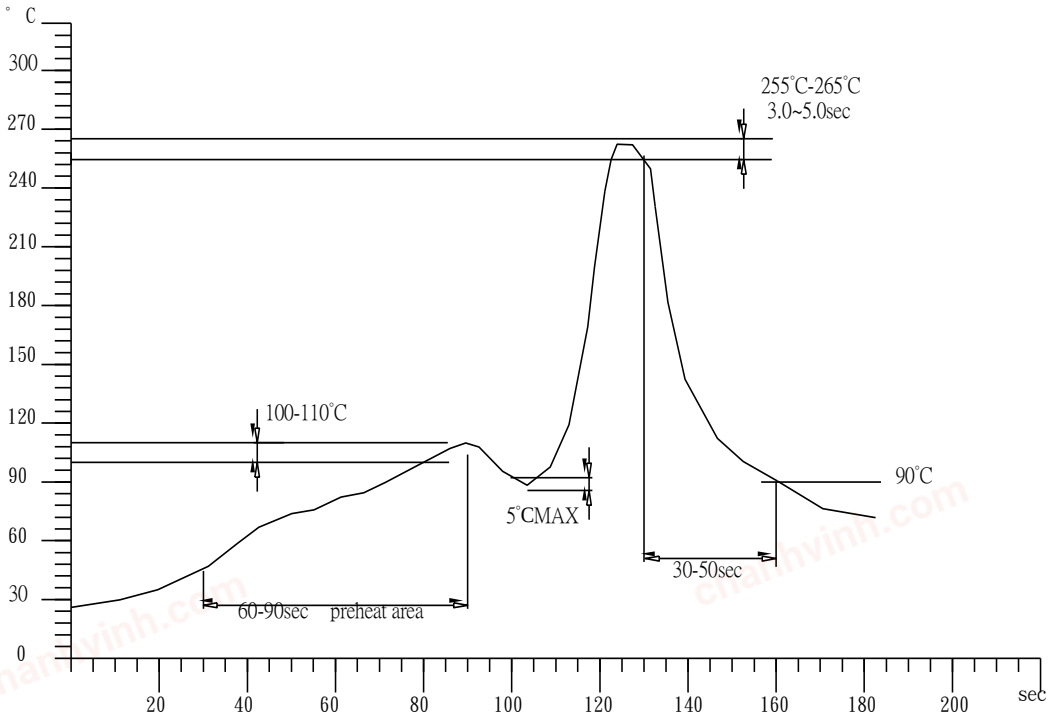

Carton Package

DKA2P/ DKB2H3/DKB2PH3

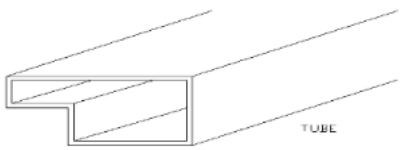

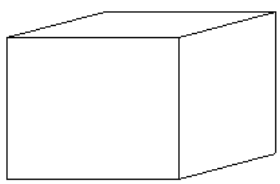

INNER CARTON:567*135*125

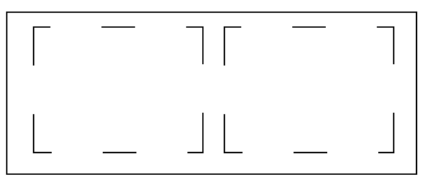

EXPORT CARTON:598*287*150

TUBE=25PCS
INNER CARTON=50 TUBE=50*25=1250PCS
ECPORT CARTON=2 INNER CARTON=2*1250=2500PCS

chanhvinh.com

DC-DC Converters (1.5kVdc, 3kV and 6kV Isolation) 2W SIP

DKA/DKB/HBA2- series

Carton Package

HBA2

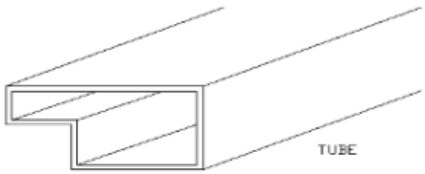

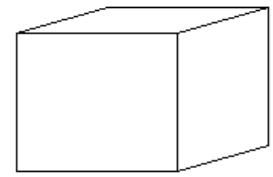

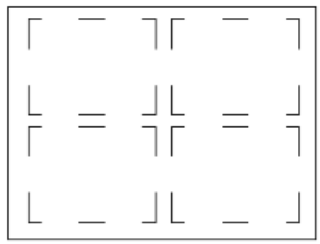

TUBE=15PCS

INNER CARTON=36 TUBE=36*15=540PCS

EXPORT CARTON=4 INNER CARTON=4*540=2160PCS

For More Information:

Americas - prodinfo_network_americas@yageo.com | **Europe -** prodinfo_network_emea@yageo.com | **Asia -** prodinfo_network_asia@yageo.com

Performance warranty of products offered on this data sheet is limited to the parameters specified. Data is subject to change without notice. Other brand and product names mentioned herein may be trademarks or registered trademarks of their respective owners. © Copyright, 2023. Pulse Electronics, Inc. All rights reserved.