chanhvinh.com

EMI Common Mode Choke

BWCU Series

Overview

An EMI common mode choke (CMC) for power lines is a passive component specifically designed to suppress electromagnetic interference (EMI) in power supply circuits
A full series of common mode choke is designed for excellent noise attenuation with compact sizing for use in wide range of applications. Both standard series and custom designs are available.

Benefits

1. EMI/RFI Suppression
2. Improved Signal Integrity
3. Effectively suppresses noise over a wide frequency spectrum, including low-frequency and high-frequency EMI.
4. Common mode chokes are compact and suitable for applications where space is limited.

Applications

1. USB line for personal computers and peripheral
2. IEEE 1394 line for personal computers, DVC, STB
3. LVDS, panel line for liquid display panels, graph card,etc

Product Information

Series	Size Code (JIS/EIA)	Impedance (Ω)
BWCU	1608/0603 2012/0805 1210/0504 3216/1206 2520/1008 3225/1210	22 ~ 2200

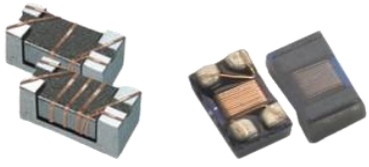

chanhvinh.com

YAGEO GROUP PULSE

BWCU00321619 Series Specification

1 Scope:
This specification applies to BWCU Wire Wound Common Mode Choke Coil

2 Part Numbering:

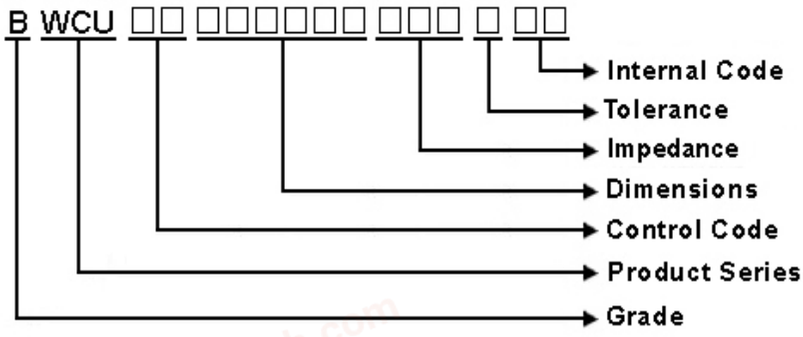

3 Rating:

Operating Temperature: - 40℃ ~ 105℃
(Including self - temperature rise)

Storage Temperature: - 40℃ ~ 105℃
(The storage temperature range is for after the assembly)

4 Marking:

No Marking

5 Standard Testing Condition

	Unless otherwise specified	In case of doubt
Temperature	Ordinary Temperature(15 to 35℃)	20 to 30℃
Humidity	Ordinary Humidity(25 to 85% RH)	50 to 80 %RH

chanhvinh.com

BWCU00321619 Series Specification

6 Configuration and Dimensions and Unit Weight:

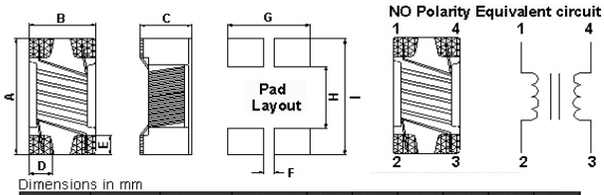

Dimensions in mm

TYPE	A	B	C	D	E	F	G	H	I
321619	3.2±0.2	1.6±0.2	1.9±0.2	0.5	0.6	0.4	1.6	1.6	3.7

Net Weight (grms)

SIZE CODE	Net Weight (grms)
261619	0.039 (typ.)

7 Electrical Characteristics:

Part No.	Z (Ω)	RDC (Ω)Max.	IDC (mA)	Rated Voltage (Vdc)	Withstanding Voltage (Vdc)	Insulation Resistance (MΩ)(min)	Tolerance (±%)	Test Freq. (MHz)
BWCU00321619900□02	90	0.3	370	50	125	10	20,25	100
BWCU00321619121□02	120	0.3	370	50	125	10	20,25	100
BWCU00321619161□02	160	0.4	340	50	125	10	20,25	100
BWCU00321619171□02	170	0.4	330	50	125	10	20,25	100
BWCU00321619221□02	220	0.4	320	50	125	10	20,25	100
BWCU00321619261□02	260	0.5	310	50	125	10	20,25	100
BWCU00321619401□02	400	0.5	300	50	125	10	20,25	100
BWCU00321619501□02	500	0.6	280	50	125	10	20,25	100
BWCU00321619601□02	600	0.8	260	50	125	10	20,25	100
BWCU00321619102□02	1000	1	230	50	125	10	20,25	100
BWCU00321619222□02	2200	1.2	200	50	125	10	20,25	100

NOTE: □-tolerance M=±20% / Y=±25%

1.Operating temperature range -40℃~105℃(Including self - temperature rise)

2.RDC: SINGLE WIRE TEST VALUE

3.IDC for Inductance drop 10% from its value without current.

chanhvinh.com

BWCU00321619 Series Specification

8 BWCU00321619 Series

8.1 Construction:

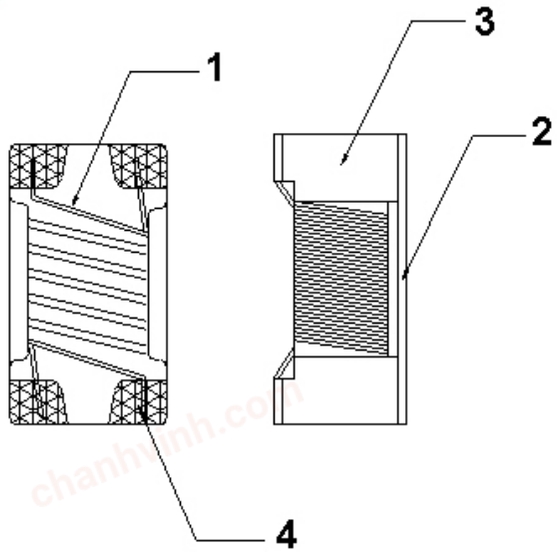

8.2 Material List:

NO	PART	MATERIAL
1	WIRE	Grade 180
2	COVER SHEET	FERRITE CORE
3	CORE	FERRITE CORE
4	TERMINAL	Ag/Cu/Ni/Sn

chanhvinh.com

YAGEO GROUP PULSE

BWCU00321619 Series Specification

9 Common Mode Choke / RELIABILITY TEST

1-1.Environmental Performance

No	Item	Specification	Test Method
1-1-1	Temperature Cycle	Appearance: No Damage Impedance: within±20% of initial value	One cycle: Step / Temperature (℃) / Time (min) 1 / -40±3 / 30 2 / 25±2 / 3 3 / 105±3 / 30 4 / 25±2 / 3 Total: 5 cycles Measured After Exposure in The Room Condition For 1hrs
1-1-2	High Temperature Resistance		Temperature: 105±3℃ Time: 1000Hrs Measured After Exposure In The Room Condition For 1Hrs
1-1-3	Low Temperature Resistance		Temperature: -40±3℃ Time: 1000Hrs Measured After Exposure In The Room Condition For 1Hrs
1-1-4	Humidity Load Life	There should be no evidence of short or open circle	Temperature: 40±2℃ Relative Humidity: 90~95% Load: Allowed DC Current Time: 96Hrs

1-2.Mechanical Performance

No	Item	Specification	Test Method
1-2-1	Resistance To Soldering Heat	Appearance: No Damage	1. The device should be reflow soldered on PCB (peak 260℃±5℃ for 10 seconds) 2. Solder Composition: Sn/Ag3.0/Cu0.5 3. Test time: 6 minutes
1-2-2	Solder ability	The electrodes shall be at least 95% covered with new solder coating	1. Pre-Heating: 150℃,1min. 2. Solder Composition: Sn/Ag3.0/Cu0.5 3. Solder Temperature: 245±5℃. 4. Immersion Time: 4±1 sec.
1-2-3	Commponent Adhesion (Push Test)	1 Lbs. For 1210 Size 2 Lbs. For other	The device should be reflow soldered (245±5℃ For 10 seconds) to a tinned copper substrate. A force guauge should be applied to the side of the component. The device must withstand a minimum force of 2 pounds without a failure of the termination attached to component

chanhvinh.com

YAGEO GROUP PULSE

BWCU00321619 Series Specification

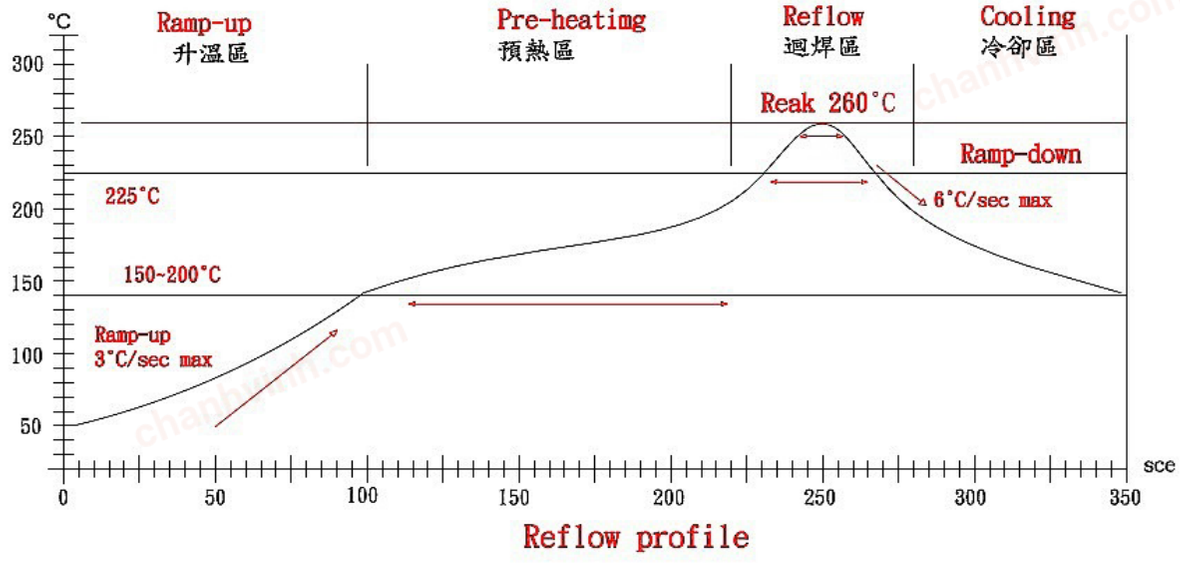

Reflow profile

Lead-Free(LF)標準溫度分析範圍 Refer to J-STD-020C

管制項目 Item.	升溫區 Ramp-up	預熱區 Pre-heating	迴焊區 Reflow	Peak Temp	冷卻區 Cooling
溫度範圍 Temp.scope	R.T ~ 150℃	150℃ ~ 200℃	Above 217℃	260±5℃	Peak Temp.~150℃
標準時間 Time spec.	-	60 ~ 180 sec	60 ~ 150 sec	20 ~ 40 sec	-
實際時間 Time result	-	75 ~ 100 sec	90 ~ 120 sec	20 ~ 35 sec	-

NOTE:

1.Re-flow possible times : within 3 times
2.Nitrogen adopted is recommendes while in re-flow
3.Products can only be soldered with reflow

chanhvinh.com

BWCU00321619 Series Specification

10 Packaging:

10.1 Packaging -Cover Tape

The force for tearing off cover tape is 10 to 100 grams in the arrow direction.

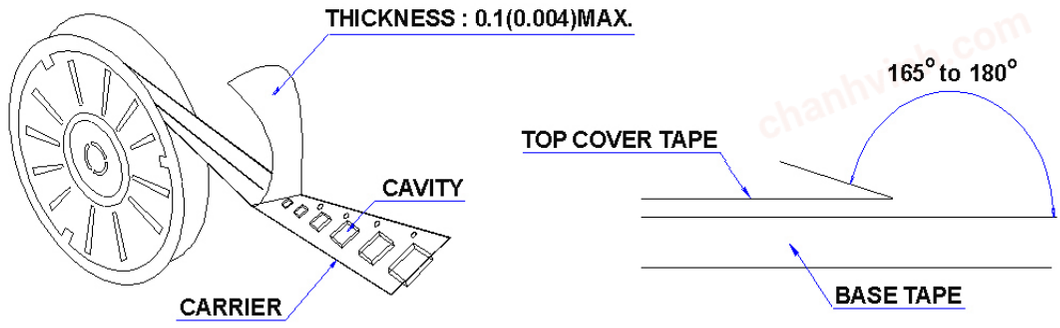

10.2 Packaging Quantity

TYPE	PCS/REEL
321619	2000

10.3 Reel Dimensions

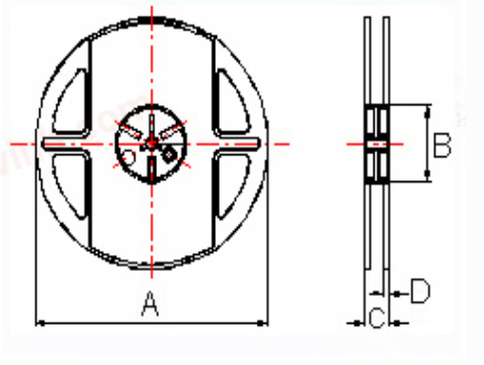

Dimensions in mm

TYPE	A	B	C	D
321619	178	60	12	1.5

chanhvinh.com

BWCU00321619 Series Specification

10 Packaging:

10.4 Tape Dimensions in mm

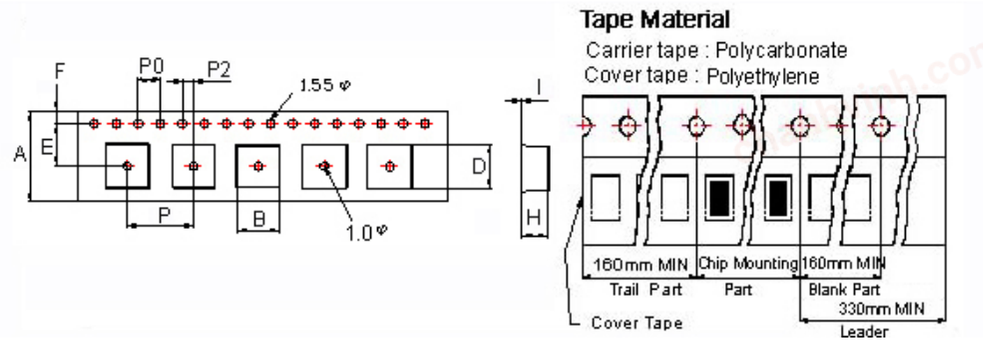

TYPE	A	B	D	E	F	H	I	P	P0	P2
321619	8	1.76	3.47	3.5	1.75	2.05	0.22	4	4	2

11 Recommended Land Pattern:

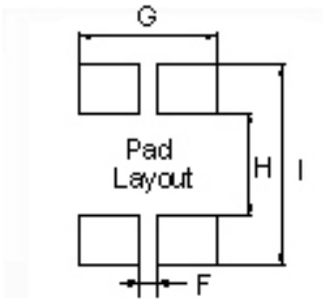

Dimensions in mm

TYPE	F(In/mm)	G(In/mm)	H(In/mm)	I(In/mm)
321619	0.16/0.4	0.06/1.6	0.06/1.6	0.15/3.7

12 Note:

1. Please make sure that your product has been evaluated and confirmed against your specifications when our product is mounted to your product.
2. Do not knock nor drop.
3. All the items and parameters in this product specification have been prescribed on the premise that our product is used for the purpose,under the condition and in the environment agreed upon between you and us. You are requested not to use our product deviating from such agreement.
4. The storage period is less than 12 months. Be sure to follow the storage conditions (Temperature: 5 to 40°C, Humidity: 10 to 75% RHor less).
   If the storage period elapses, the soldering of the terminal electrodes may deteriorate.
5. Do not use or store in locations where there are conditions such as gas corrosion (salt, acid, alkali, etc.).
6. The moisture sensitivity level (MSL) of products is classified as level 1.

chanhvinh.com

BWCU00321619 Series Specification

13 Graph:

BWCU00321619900□02

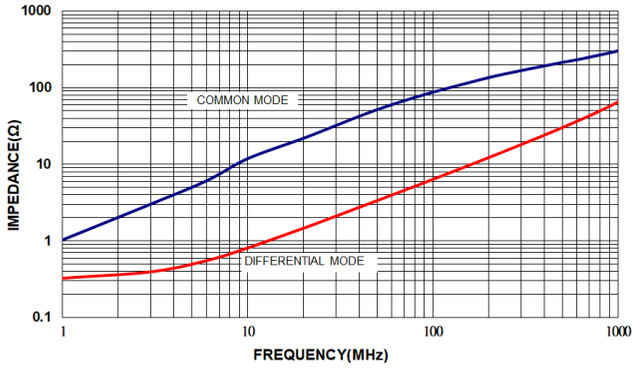

BWCU00321619121□02

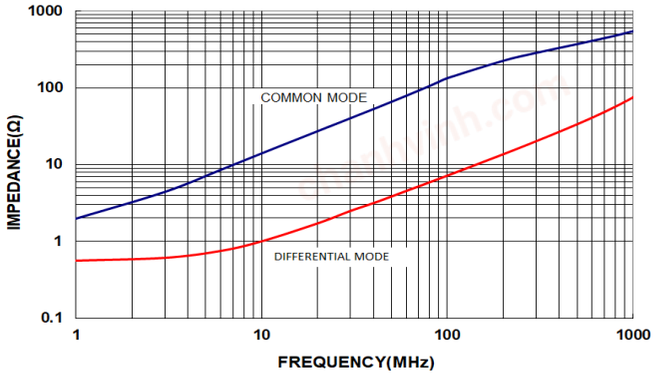

BWCU00321619161□02

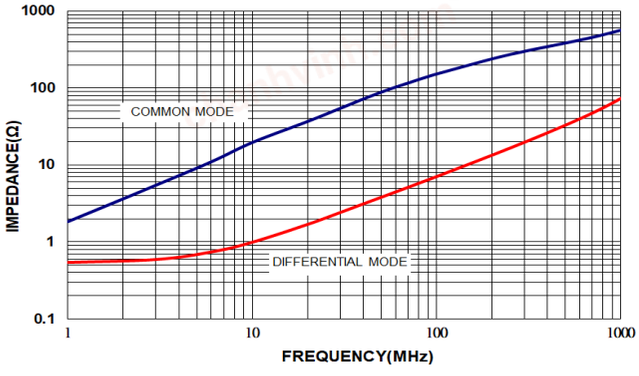

BWCU00321619171□02

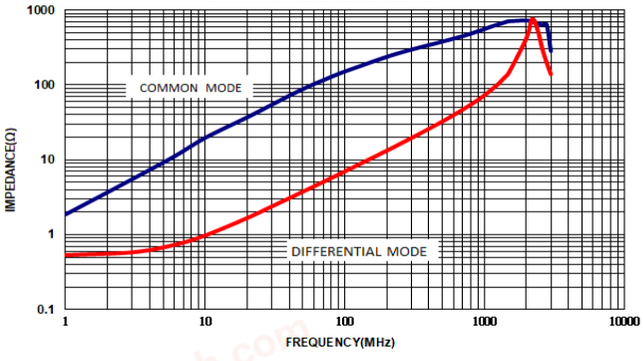

BWCU00321619221□02

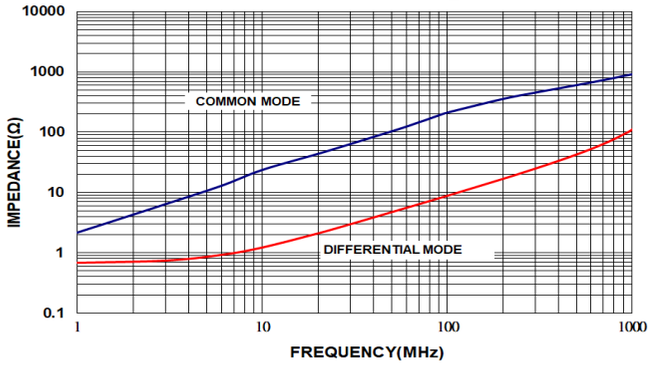

BWCU00321619261□02

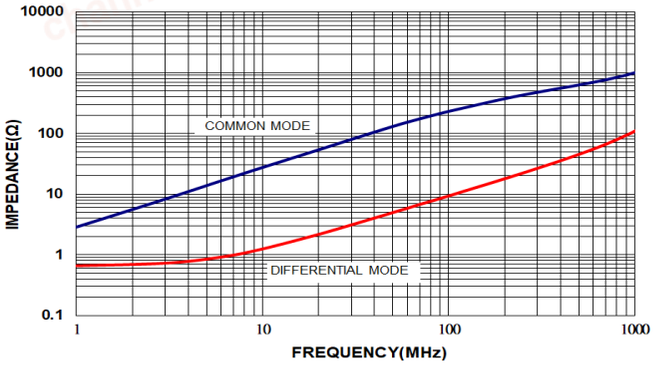

BWCU00321619401□02

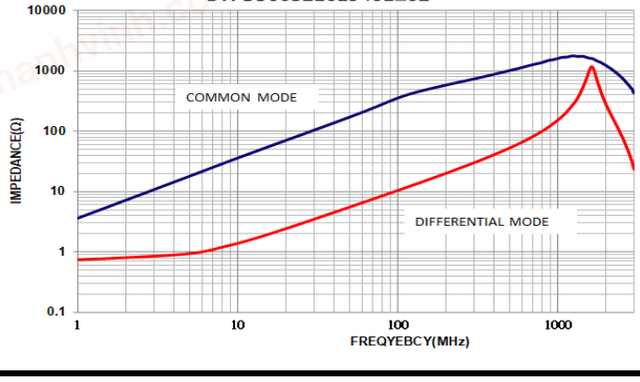

BWCU00321619501□02

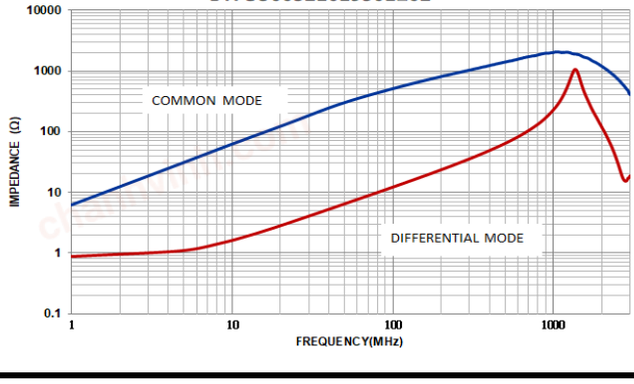

chanhvinh.com

BWCU00321619 Series Specification

BWCU00321619601□02

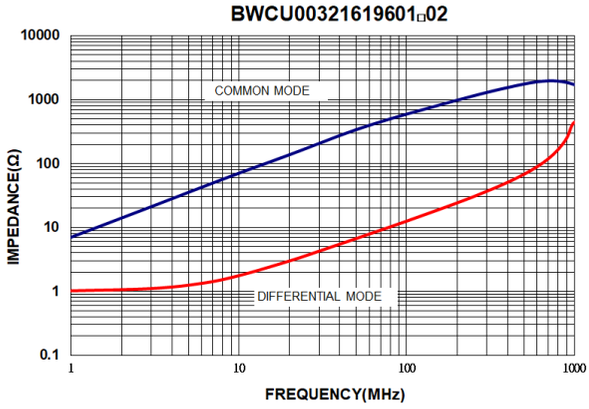

BWCU00321619102□02

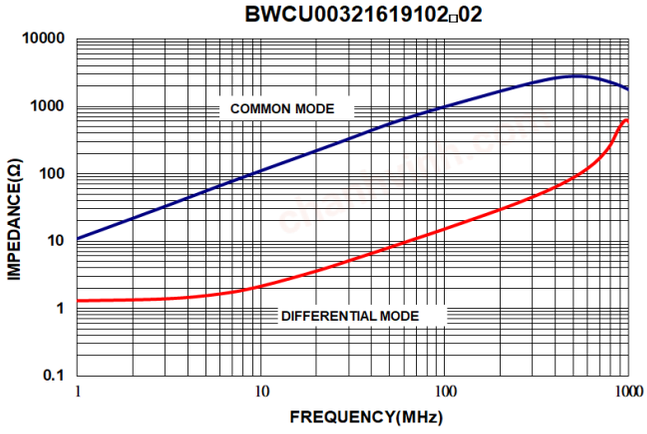

BWCU00321619222□02

