chanhvinh.com

SMT Power Line Communication (PLC) Transformers for Automotive use

BM6210HL, BM6220NL and BM6230HL

Pulse a YAGEO company



Features and Benefits:

- *Wideband Frequency response 3~30MHz*
- *Industrial and Automotive Temperature range from -40°C to +125°C*
- *Eco-friendly - Halogen Free options*
- *Turns ratio supports variety of PLC chipsets*
- *Supports IEC-62368 for off-line 16Vdc and 500Vdc supply lines*
- *Automotive designs meet AEC-Q200 and covered by ISO/IATF16949 and PPAP on request*

Electrical Specifications @ 25°C – Operating Temperature -40°C to +125°C

Part [1,6,7] Number BM6210HL[9]	Turns Ratio +/- 2% (N1:N2:N3)	▽ OCL[2,3] (uH Min)	▽[3] DCR (mΩ Max)			Insertion Loss[4] (dB Max)	Leakage[5] Inductance (uH Max)	Hi-Pot (Vac)	AEC-Q200 Qualified	Insulation[6] Class	Working Voltage	Clearance (mm Min)	Package Size (mm)
			N1	N2	N3								
BM6210HL[9]	1:1:1	5	500	500	500	-	0.5	500	Yes	Functional	500Vdc	-	6.9 x 12.0 x 5.0
BM6220NL	1:1	12	500	500	500	-1.0	0.25	500	Yes	Functional	16V	-	9.5 x 12.0 x 10.0
BM6230HL[9]	1:1:1	28	250	250	250	2.25	-	3000	Yes	Reinforced	500Vdc	-	14.6 x 16.15 x 6.0

Notes:

1. Optional T&R packaging can be ordered by adding a T suffix to the part number (ie: BM6220NL becomes BM6220NLT)
2. Inductance spec is for -40°C to +125°C and measured at 100kHz, 100mVrms (BM6210HL), 2MHz, 100mVrms (BM6220NL), 100kHz, 10mVrms (BM6230HL)
3. ▽ represents special characteristic per IATF16949 for AEC-Q200 qualified parts on parts listed as AEC-Q200 qualified.
4. Insertion Loss measured from 1.5MHz to 30MHz across (1-4) for BM6220NL and (1-3) for BM6230HL
5. Leakage Inductance on BM6210HL measured on (1-4) with (5-6)&(7-8) shorted at 100kHz, 100mVrms, BM6220HL measured on(1-4) with (8-5) shorted at 2MHz, 100mVrms
6. Designed in accordance with EN/UL/IEC63268 (250Vrms working voltage unless stated, Material Group 3, Pollution Degree 2, Overvoltage Category 3)
7. Components are compliant to :
   a. J-STD-002 (Solderability at 245°C reflow profile)
   b. J-STD-020 (Level 1, Not Moisture Sensitive)
   c. J-STD-075 (R7, 245C Max through Reflow Solder)
8. Operating Temperature is -40°C to 125°C and Storage Temperature is -50°C to 125°C on all parts
9. RoHS and Halogen Free design
10. Non-Automotive designs can be created for residential PLC solutions - parts ordering prefix code letters changes from BM to BX - discuss with FAE and Sales.

chanhvinh.com

SMT Power Line Communication (PLC) Transformers for Automotive use

BM6210HL, BM6220NL and BM6230HL

Pulse a YAGEO company

MECHANICAL

SCHEMATIC

BM6210HL

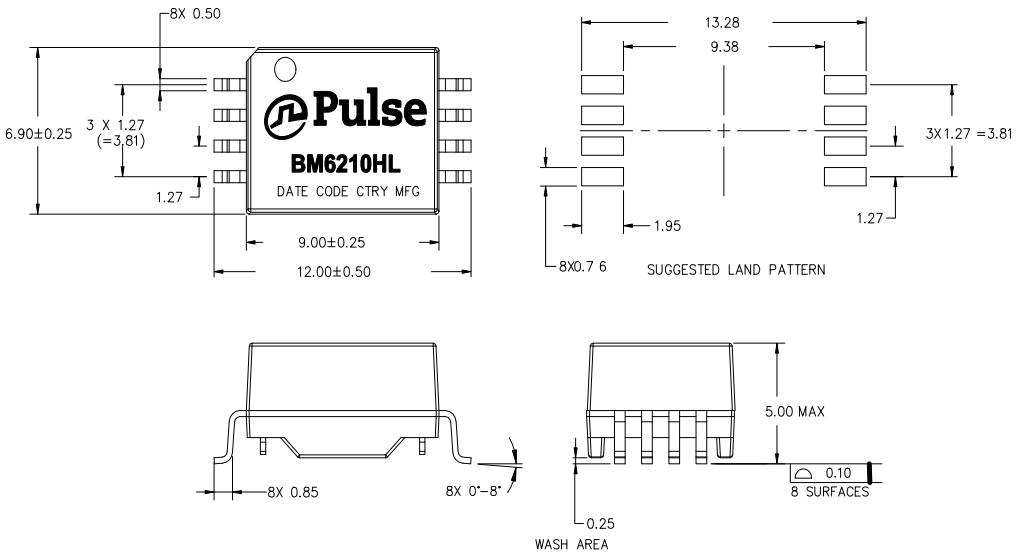

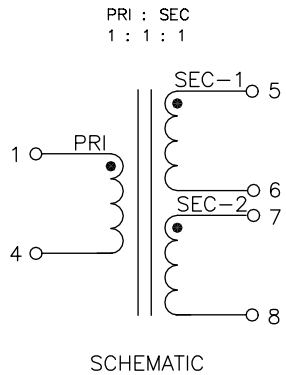

SCHEMATIC

Dimensions: mm
Unless otherwise specified, all tolerances are ± 0,25

MECHANICAL

SCHEMATIC

BM6220NL

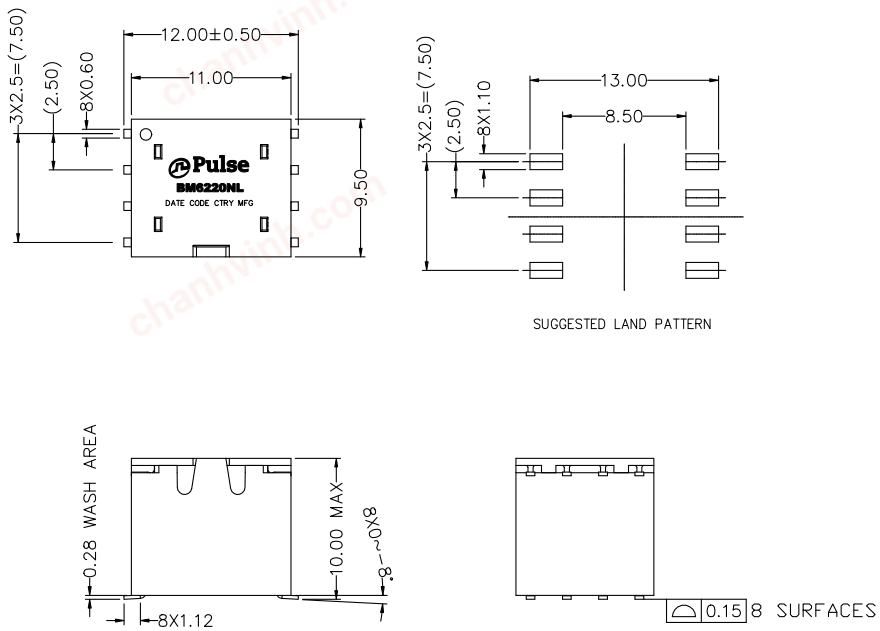

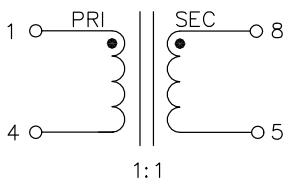

SCHEMATIC

Dimensions: mm
Unless otherwise specified, all tolerances are ± 0,25

chanhvinh.com

SMT Power Line Communication (PLC) Transformers for Automotive use

BM6210HL, BM6220NL and BM6230HL

Pulse a YAGEO company

MECHANICAL

BM6230HL

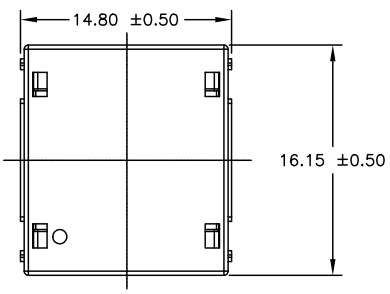

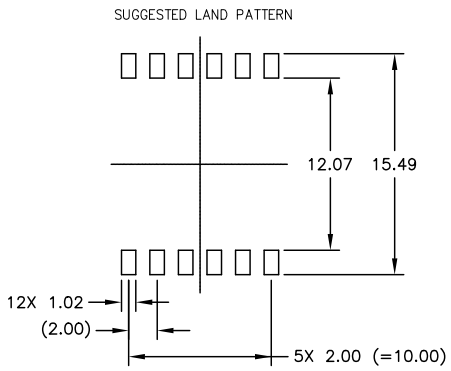

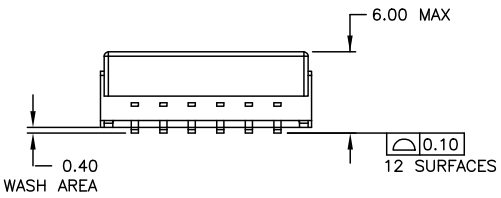

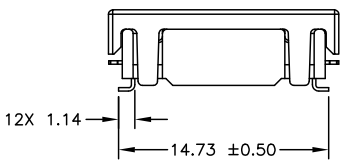

SCHEMATIC

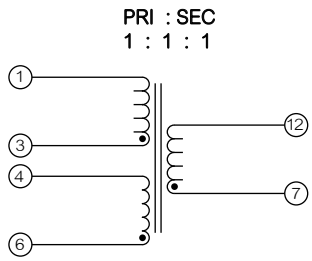

Dimensions: mm
Unless otherwise specified, all tolerances are ± 0,25

APPLICATION OF POWER LINE COMMUNICATION IN EV CHARGING

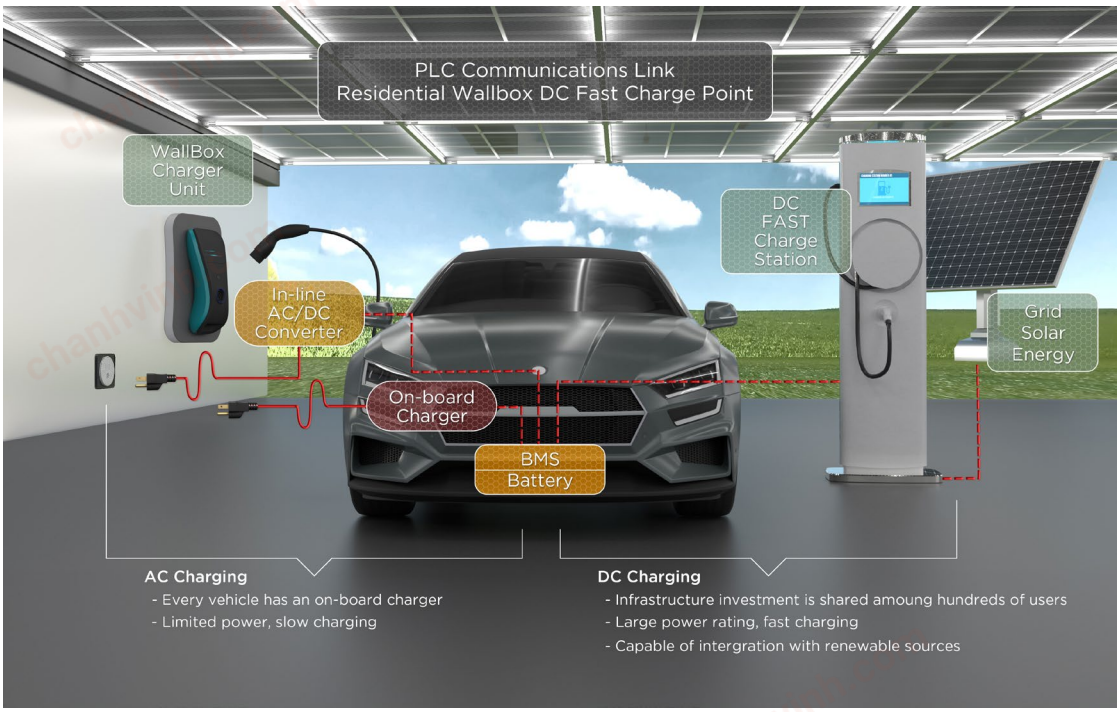

chanhvinh.com

SMT Power Line Communication (PLC) Transformers for Automotive use

BM6210HL, BM6220NL and BM6230HL

TAPE and REEL

CARRIER TAPE - SEE TABLES BELOW

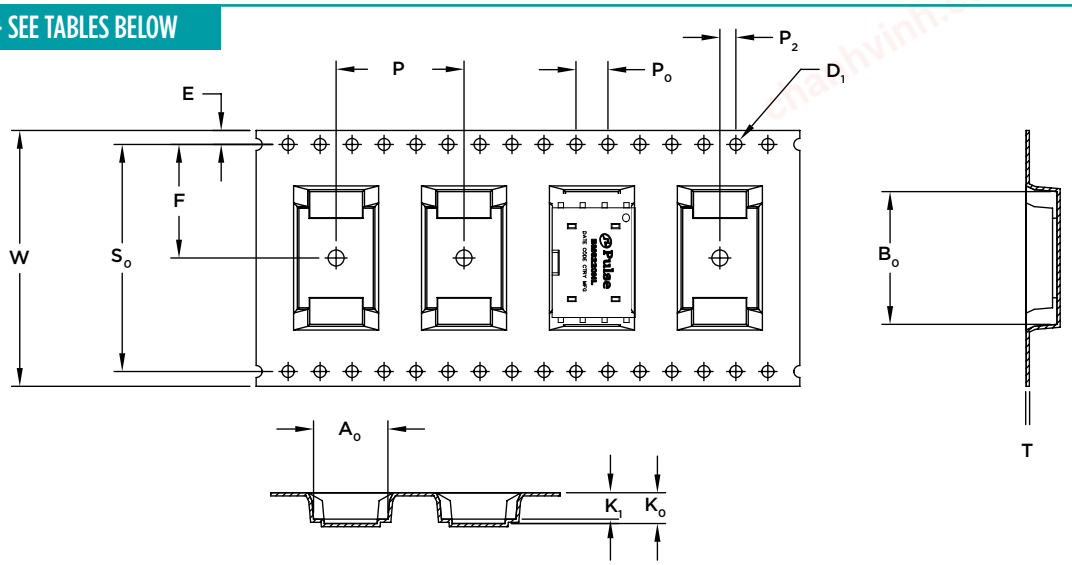

BM6210HLT							
W	24.0+/-0.30	P	16.00	A_o	7.01+/-0.10	B_o	12.61+/-0.10
S_o	No 2nd row feeder holes	P_o	4.00	A_1	--------	B_1	--------
E	1.75 +/-0.10	P_2	2.00	A_2	--------	B_2	--------
F	11.50+/-0.10	D_o	--------	K_o	5.35	K_1	3.91
T	0.40±0.05	D_1	1.50 $^{\pm0.10}_{-0.00}$	QUANTITY PER REEL			650 pieces

BM6220NLT							
W	24.0+/-0.30	P	20.00	A_o	9.80+/-0.10	B_o	12.4+/-0.10
S_o	No 2nd row feeder holes	P_o	4.00	A_1	--------	B_1	--------
E	1.75 +/-0.10	P_2	2.00	A_2	--------	B_2	--------
F	11.50+/-0.10	D_o	--------	K_o	10.40	K_1	--------
T	0.50±0.05	D_1	1.50 $^{\pm0.10}_{-0.00}$	QUANTITY PER REEL			250 pieces

BM6230HLT							
W	32.0+/-0.30	P	24.00	A_o	16.10+/-0.10	B_o	15.10+/-0.10
S_o	28.4+/-0.30	P_o	4.00	A_1	--------	B_1	--------
E	1.75 +/-0.10	P_2	2.00	A_2	--------	B_2	--------
F	14.20+/-0.10	D_o	--------	K_o	7.00	K_1	--------
T	0.50±0.05	D_1	1.50 $^{\pm0.10}_{-0.00}$	QUANTITY PER REEL			360 pieces

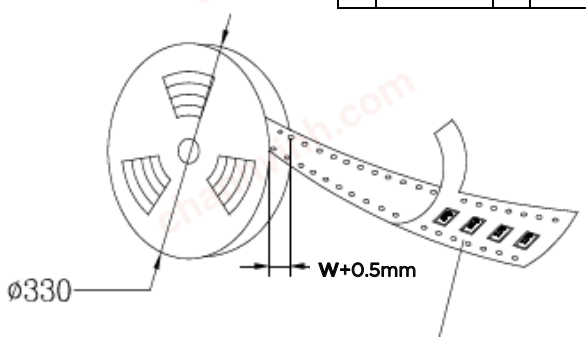

All Dimensions meet EIA-481-D requirements.

Component

1. **Material:** Black Conductive Polystyrene
2. **Components per Reel:** see table
3. **Quantity per carton:**

   24mm Tape = 6x full reels
   32mm Tape = 5x full reels

For More Information:

Americas - prodinfo_network_americas@yageo.com | **Europe -** prodinfo_network_emea@yageo.com | **Asia -** prodinfo_network_asia@yageo.com

Performance warranty of products offered on this data sheet is limited to the parameters specified. Data is subject to change without notice. Other brand and product names mentioned herein may be trademarks or registered trademarks of their respective owners. © Copyright, 2023. Pulse Electronics, Inc. All rights reserved.

YAGEO Corporation and its affiliates do not recommend the use of commercial or automotive grade products for high reliability applications or manned space flight.