chanhvinh.com

EMI Ferrite Bead

BBFY Series

Overview

EMI ferrite beads are made of ferrite material, which can block high-frequency noise while allowing required signals to pass through, providing high impedance and noise attenuation to improve signal integrity/efficiency and reduce power loss.

Benefits

1. Compliance with EMI regulations.
2. Reduced power loss and improved system efficiency
3. Operating temperature range: -55 ~ +125°C
4. Improved signal integrity

Applications

1. Wearable Devices
2. Industrial
3. Communications
4. Consumer Electronics

Product Information

Series	Size Code (JIS/EIA)	Impedance (Ω)
BBFY	1005/0402	120 ~ 1000



chanhvinh.com

BBFY00100505 Series Specification

1 Scope:
This specification applies to MULTILAYER FERRITE CHIP BEADS

2 Part Numbering:

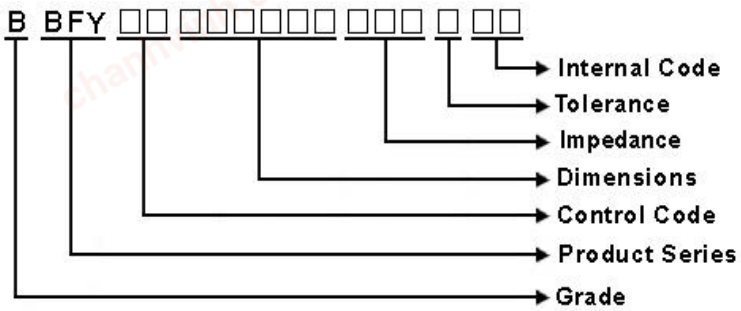

3 Rating:

Operating Temperature: - 55℃ ~ 125℃(Including self - temperature rise)

Storage Temperature: - 55℃ ~ 125℃(after PCB)
- 5℃~40℃,Humidity 40%~70%(before PCB)

4 Marking:

No Marking

5 Standard Testing Condition

	Unless otherwise specified	In case of doubt
Temperature	Ordinary Temperature(15 to 35℃)	20 to 30℃
Humidity	Ordinary Humidity(25 to 85% RH)	50 to 80 %RH

chanhvinh.com

BBFY00100505 Series Specification

6 Configuration and Dimensions:

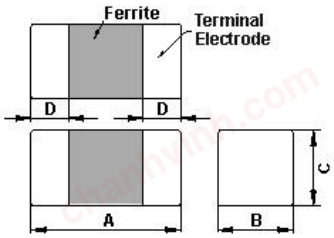

Dimensions in mm

TYPE	100505
A	1.00±0.1
B	0.50±0.1
C	0.50±0.1
D	0.25±0.1

Net Weight (grms)

Size Code	Net Weight (grms)
100505	0.0014

7 Electrical Characteristics:

Part No.	Impedance (Ω)±25%	Impedance (Ω)±40%	Test Freq. (MHZ)	RDC (Ω)Max.	Rated Current (mA)Max.
BBFY00100505221YHN	220	270	100/1000	0.55	450
BBFY00100505601YHN	600	1000	100/1000	0.7	300
BBFY00100505102YHN	1000	1400	100/1000	1.1	250

NOTE: tolerance Y=±25%

1.Operating temperature range - 5 5℃ ~ 1 2 5℃(Including self - temperature rise)

2.Rate Current : Applied the current to coils, the temperature rise shall not be more than 30℃

3.Impedance Test OSC @200mV

chanhvinh.com

BBFY00100505 Series Specification

8 BBFY00100505 Series

8.1 Construction:

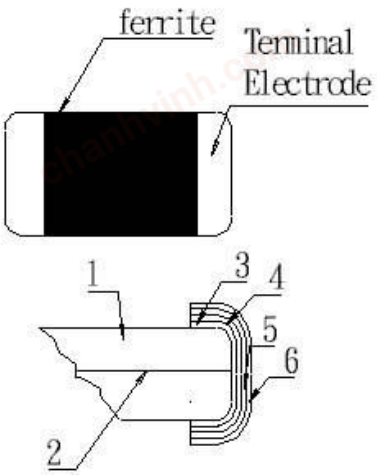

8.2 Material List:

No	Part	Material
1	Ferrite Substance	NiO-CuO-ZnO-Ferrite
2	Silver electrode	Ag
3	Silver electrode	Ag
4	Cu plating	Cu
5	Ni plating	Ni
6	Sn plating	Sn

chanhvinh.com

YAGEO PULSE GROUP

BBFY00100505 Series Specification

9 Reliability Of Ferrite Multilayer Chip Bead

1-1.Mechanical Performance

No	Item	Specification	Test Method
1-1-1	Flexure Strength	The forces applied on the right conditions must not damage the terminal electrode and the ferrite	Test device shall be soldered on the substrate Substrate Dimension: 100x40x1.6mm Deflection: 2.0mm Keeping Time: 30sec *For 100505, substrate dimension is 100x40x0.8mm 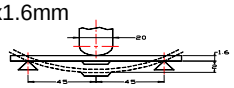
1-1-2	Vibration		Test device shall be soldered on the substrate Oscillation Frequency: 10 to 55 to 10Hz for 1min Amplitude: 1.5mm Time: 2hrs for each axis (X, Y & Z), total 6hrs
1-1-3	Resistance to Soldering Heat	Appearance: No damage More than 75% of the terminal electrode should be covered with solder. Impedance : within ±30% of initial value	Pre-heating: 150℃, 1min Solder Composition: Sn/Ag3.0/Cu0.5(Pb-Free) Solder Temperature: 260±5℃ Immersion Time: 10±1sec
1-1-4	Solder ability	The electrodes shall be at least 95% covered with new solder coating	Pre-heating: 150℃, 1min Solder Composition: Sn/Ag3.0/Cu0.5(Pb-Free) Solder Temperature: 245±5℃(Pb-Free) Immersion Time: 4±1sec
1-1-5	Terminal Strength Test	No split termination 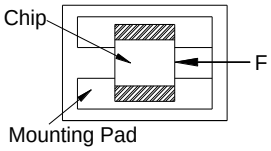	Test device shall be soldered on the substrate, then apply a force in the direction of the arrow. Force : 5N Keeping Time: 10±1sec

1-2.Environmental Performance

No	Item	Specification	Test Method
1-2-1	Temperature Cycle	Appearance: No damage Impedance: within±30% of initial value	One cycle: Step / Temperature (℃) / Time (min) 1 / -55±3 / 30 2 / 25±2 / 3 3 / 125±3 / 30 4 / 25±2 / 3 Total: 100cycles Measured after exposure in the room condition for 24hrs
1-2-2	Humidity Resistance		Temperature: 40±2℃ Relative Humidity: 90 ~ 95% / Time: 1000hrs Measured after exposure in the room condition for 24hrs
1-2-3	High Temperature Resistance		Temperature: 125±3℃ / Relative Humidity: 0% Applied Current: Rated Current /Time: 1000hrs Measured after exposure in the room condition for 24hrs
1-2-4	Low Temperature Resistance		Temperature: -55±3℃ Relative Humidity: 0% / Time: 1000hrs Measured after exposure in the room condition for 24hrs

chanhvinh.com

YAGEO PULSE GROUP

BBFY00100505 Series Specification

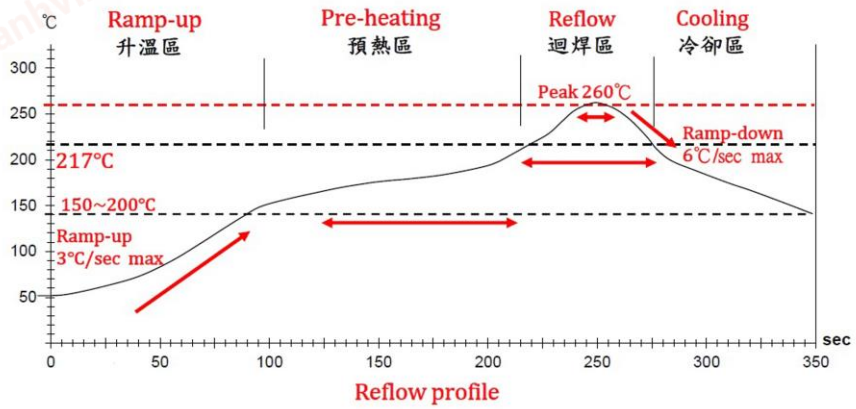

Reflow profile

Lead-Free(LF)標準溫度分析範圍 **Refer to J-STD-020C**

管制項目 Item.	升溫區 Ramp-up	預熱區 Pre-heating	迴焊區 Reflow	Peak Temp	冷卻區 Cooling
溫度範圍 Temp.scope	R.T ~ 150℃	150℃ ~ 200℃	Above 217℃	260±5℃	Peak Temp.~150℃
標準時間 Time spec.	-	60 ~ 180 sec	60 ~ 150 sec	20 ~ 40 sec	-
實際時間 Time result	-	75 ~ 100 sec	90 ~ 120 sec	20 ~ 35 sec	-

NOTE :

1. Re-flow possible times : within 2 times
2. Nitrogen adopted is recommended while in re-flow
3. Products can only be soldered with reflow

chanhvinh.com

BBFY00100505 Series Specification

9 Packaging:

9.1 Packaging -Cover Tape

The force for tearing off cover tape is 10 to 100 grams in the arrow direction.

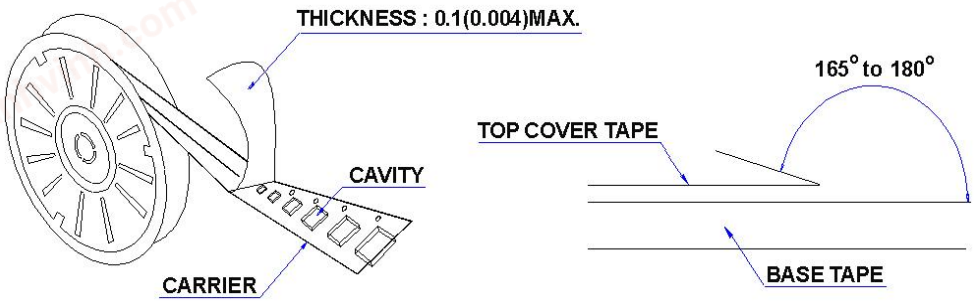

9.2 Packaging Quantity

TYPE	PCS/REEL
100505	10000

9.3 Reel Dimensions

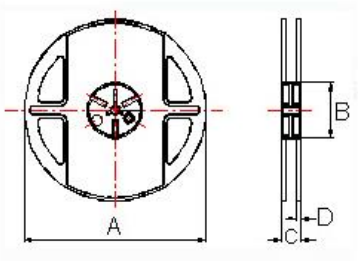

Dimensions in mm

TYPE	A	B	C	D
100505	178	60	12	1.5

chanhvinh.com

BBFY00100505 Series Specification

9 Packaging:

9.4 Tape Dimensions in mm

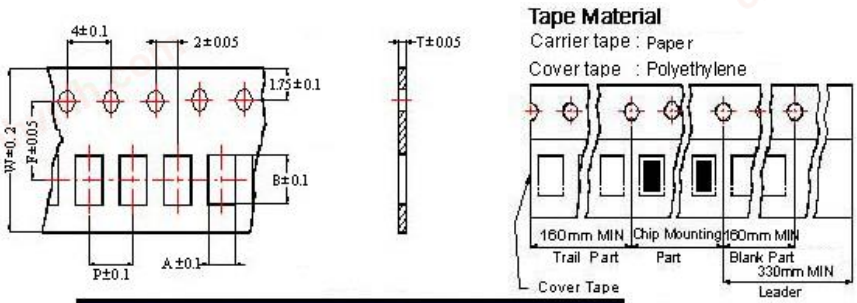

TYPE	A	B	T	W	P	F
100505	0.62	1.12	0.60	8	2	3.5

10 Recommended Land Pattern:

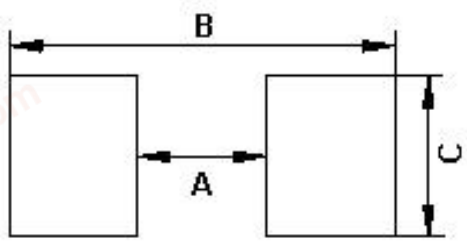

Dimensions in mm

TYPE	A	B	C
100505	0.4	1.2~1.4	0.5

11 Note:

1. Please make sure that your product has been evaluated and confirmed against your specifications when our product is mounted to your product.
2. Do not knock nor drop.
3. All the items and parameters in this product specification have been prescribed on the premise that our product is used for the purpose,under the condition and in the environment agreed upon between you and us. You are requested not to use our product deviating from such agreement.
4. Please keep the distance between transformer/coil and other components (refer to the standard IEC 950)
5. The moisture sensitivity level (MSL) of products is classified as level 1.

chanhvinh.com

BBFY00100505 Series Specification

12 Graph:

BBFY00100505221YHN

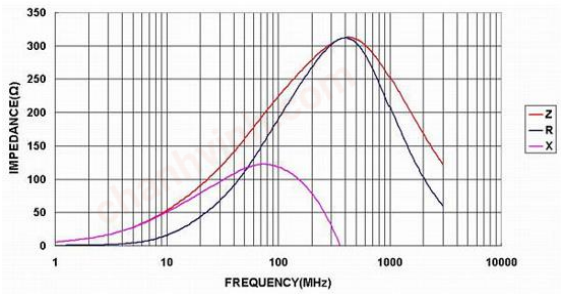

BBFY00100505601YHN

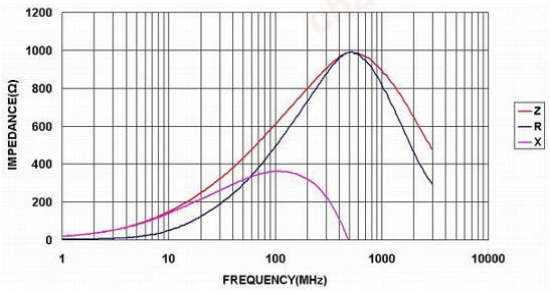

BBFY00100505102YHN

