chanhvinh.com

# EMI Ferrite Bead

## BBFJ Series

### Overview

EMI ferrite beads are made of ferrite material, which can block high-frequency noise while allowing required signals to pass through, providing high impedance and noise attenuation to improve signal integrity/efficiency and reduce power loss.

### Benefits

1. Compliance with EMI regulations.
2. Reduced power loss and improved system efficiency
3. Operating temperature range: -55 ~ +125°C
4. Improved signal integrity

### Applications

1. Wearable Devices
2. Industrial
3. Communications
4. Consumer Electronics

### Product Information

| Series | Size Code (JIS/EIA) | Impedance (Ω) |
|---|---|---|
| BBFJ | 1005/0402 | 600 ~ 1800 |



chanhvinh.com

# BBFJ00100505 Series Specification

## 1 Scope:
This specification applies to MULTILAYER FERRITE CHIP BEADS

## 2 Part Numbering:

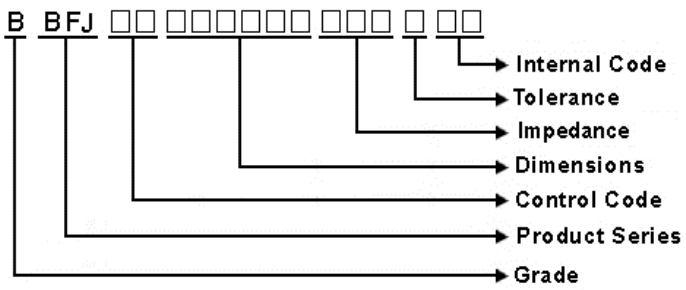


## 3 Rating:

Operating Temperature: - 55℃ ~ 125℃(Including self - temperature rise)

Storage Temperature: - 55℃ ~ 125℃(after PCB)
- 5℃~40℃,Humidity 40%~70%(before PCB)

## 4 Marking:

No Marking

## 5 Standard Testing Condition

| | Unless otherwise specified | In case of doubt |
|---|---|---|
| Temperature | Ordinary Temperature(15 to 35℃) | 20 to 30℃ |
| Humidity | Ordinary Humidity(25 to 85% RH) | 50 to 80 %RH |

chanhvinh.com

YAGEO GROUP PULSE

# BBFJ00100505 Series Specification

## 6 Configuration and Dimensions:

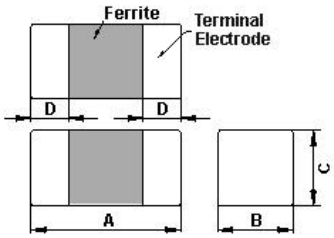


Dimensions in mm

| TYPE | 100505 |
|---|---|
| A | 1.00±0.1 |
| B | 0.50±0.1 |
| C | 0.50±0.1 |
| D | 0.25±0.1 |

Net Weight (grms)

| Size Code | Net Weight (grms) |
|---|---|
| 100505 | 0.0014 |

## 7 Electrical Characteristics:

| Part No. | Impedance (Ω)±25% | Impedance (Ω)±40% | Test Freq. (MHZ) | RDC (Ω)Max. | Rated Current (mA)Max. |
|---|---|---|---|---|---|
| BBFJ00100505601Y00 | 600 | 1400 | 100/1000 | 0.85 | 300 |
| BBFJ00100505102Y00 | 1000 | 2000 | 100/1000 | 1.25 | 250 |
| BBFJ00100505152Y00 | 1500 | 2400 | 100/1000 | 1.8 | 230 |
| BBFJ00100505182Y00 | 1800 | 2700 | 100/1000 | 2.2 | 200 |

**NOTE: tolerance Y=±25%**

1.Operating temperature range - 5 5℃ ~ 1 2 5℃(Including self - temperature rise)

2.Rate Current : Applied the current to coils, the temperature rise shall not be more than 30℃

3.Impedance Test OSC @200mV

chanhvinh.com

# BBFJ00100505 Series Specification

## 8 BBFJ00100505 Series

### 8.1 Construction:

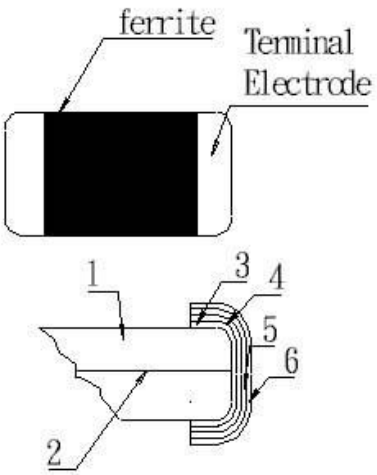


### 8.2 Material List:

| No | Part | Material |
|---|---|---|
| 1 | Ferrite Substance | NiO-CuO-ZnO-Ferrite |
| 2 | Silver electrode | Ag |
| 3 | Silver electrode | Ag |
| 4 | Cu plating | Cu |
| 5 | Ni plating | Ni |
| 6 | Sn plating | Sn |

chanhvinh.com

YAGEO GROUP PULSE

# BBFJ00100505 Series Specification

## 9 Reliability Of Ferrite Multilayer Chip Bead

### 1-1.Mechanical Performance

| No | Item | Specification | Test Method |
|---|---|---|---|
| 1-1-1 | Flexure Strength | The forces applied on the right conditions must not damage the terminal electrode and the ferrite | Test device shall be soldered on the substrate<br>Substrate Dimension: 100x40x1.6mm<br>Deflection: 2.0mm<br>Keeping Time: 30sec<br>*For 100505, substrate dimension is 100x40x0.8mm |
| 1-1-2 | Vibration | | Test device shall be soldered on the substrate<br>Oscillation Frequency: 10 to 55 to 10Hz for 1min<br>Amplitude: 1.5mm<br>Time: 2hrs for each axis (X, Y & Z), total 6hrs |
| 1-1-3 | Resistance to Soldering Heat | Appearance: No damage<br>More than 75% of the terminal electrode should be covered with solder.<br>Impedance : within ±30% of initial value | Pre-heating: 150℃, 1min<br>Solder Composition: Sn/Ag3.0/Cu0.5(Pb-Free)<br>Solder Temperature: 260±5℃<br>Immersion Time: 10±1sec |
| 1-1-4 | Solder ability | The electrodes shall be at least 95% covered with new solder coating | Pre-heating: 150℃, 1min<br>Solder Composition: Sn/Ag3.0/Cu0.5(Pb-Free)<br>Solder Temperature: 245±5℃(Pb-Free)<br>Immersion Time: 4±1sec |
| 1-1-5 | Terminal Strength Test | No split termination<br>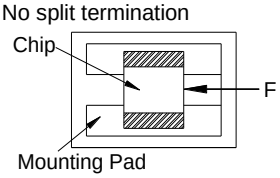 | Test device shall be soldered on the substrate, then apply a force in the direction of the arrow.<br>Force : 5N<br>Keeping Time: 10±1sec |

### 1-2.Environmental Performance

| No | Item | Specification | Test Method |
|---|---|---|---|
| 1-2-1 | Temperature Cycle | Appearance: No damage<br>Impedance: within±30% of initial value | One cycle:<br>Step / Temperature (℃) / Time (min)<br>1 / -55±3 / 30<br>2 / 25±2 / 3<br>3 / 125±3 / 30<br>4 / 25±2 / 3<br>Total: 100cycles<br>Measured after exposure in the room condition for 24hrs |
| 1-2-2 | Humidity Resistance | | Temperature: 40±2℃<br>Relative Humidity: 90 ~ 95% / Time: 1000hrs<br>Measured after exposure in the room condition for 24hrs |
| 1-2-3 | High Temperature Resistance | | Temperature: 125±3℃ / Relative Humidity: 0%<br>Applied Current: Rated Current /Time: 1000hrs<br>Measured after exposure in the room condition for 24hrs |
| 1-2-4 | Low Temperature Resistance | | Temperature: -55±3℃<br>Relative Humidity: 0% / Time: 1000hrs<br>Measured after exposure in the room condition for 24hrs |

chanhvinh.com

YAGEO PULSE GROUP

# BBFJ00100505 Series Specification

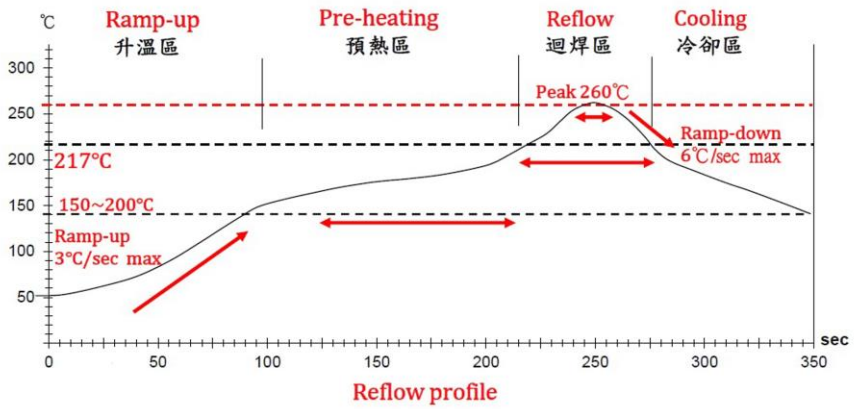


Reflow profile

**Lead-Free(LF)標準溫度分析範圍** **Refer to J-STD-020C**

| 管制項目<br>Item. | 升溫區<br>Ramp-up | 預熱區<br>Pre-heating | 迴焊區<br>Reflow | Peak Temp | 冷卻區<br>Cooling |
|---|---|---|---|---|---|
| 溫度範圍<br>Temp.scope | R.T ~ 150℃ | 150℃ ~ 200℃ | Above 217℃ | 260±5℃ | Peak Temp.~150℃ |
| 標準時間<br>Time spec. | - | 60 ~ 180 sec | 60 ~ 150 sec | 20 ~ 40 sec | - |
| 實際時間<br>Time result | - | 75 ~ 100 sec | 90 ~ 120 sec | 20 ~ 35 sec | - |

**NOTE :**

1. Re-flow possible times : within 2 times
2. Nitrogen adopted is recommended while in re-flow
3. Products can only be soldered with reflow

chanhvinh.com

# BBFJ00100505 Series Specification

## 9 Packaging:

### 9.1 Packaging -Cover Tape

The force for tearing off cover tape is 10 to 100 grams in the arrow direction.

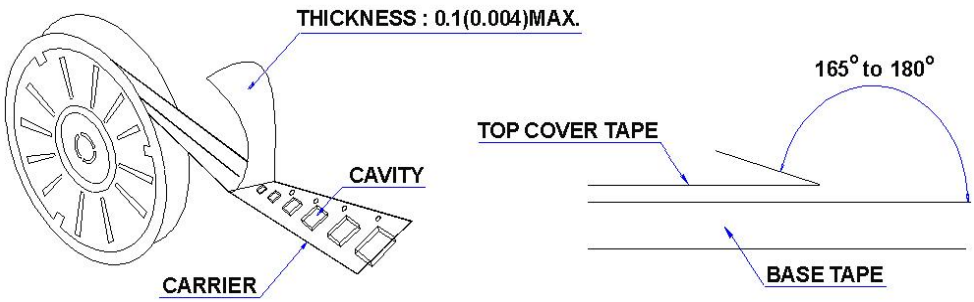


### 9.2 Packaging Quantity

| TYPE | PCS/REEL |
|---|---|
| 100505 | 10000 |

### 9.3 Reel Dimensions

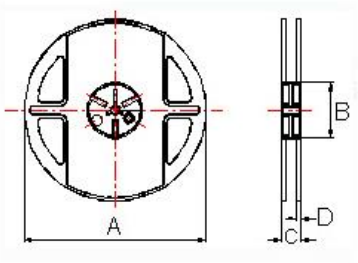


Dimensions in mm

| TYPE | A | B | C | D |
|---|---|---|---|---|
| 100505 | 178 | 60 | 12 | 1.5 |

chanhvinh.com

# BBFJ00100505 Series Specification

## 9 Packaging:

### 9.4 Tape Dimensions in mm

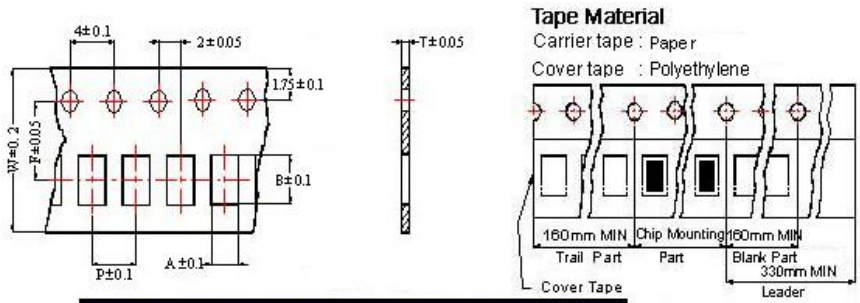


| TYPE | A | B | T | W | P | F |
|---|---|---|---|---|---|---|
| 100505 | 0.62 | 1.12 | 0.60 | 8 | 2 | 3.5 |

## 10 Recommended Land Pattern:

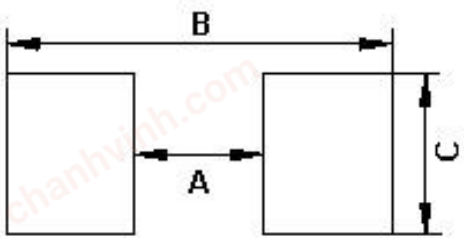


Dimensions in mm

| TYPE | A | B | C |
|---|---|---|---|
| 100505 | 0.4 | 1.2~1.4 | 0.5 |

## 11 Note:

1. Please make sure that your product has been evaluated and confirmed against your specifications when our product is mounted to your product.
2. Do not knock nor drop.
3. All the items and parameters in this product specification have been prescribed on the premise that our product is used for the purpose,under the condition and in the environment agreed upon between you and us. You are requested not to use our product deviating from such agreement.
4. Please keep the distance between transformer/coil and other components (refer to the standard IEC 950)
5. The moisture sensitivity level (MSL) of products is classified as level 1.

chanhvinh.com

# BBFJ00100505 Series Specification

## 12 Graph:

BBFJ00100505601Y00

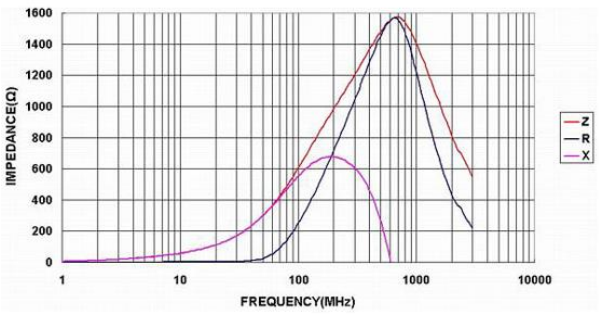


BBFJ00100505102Y00

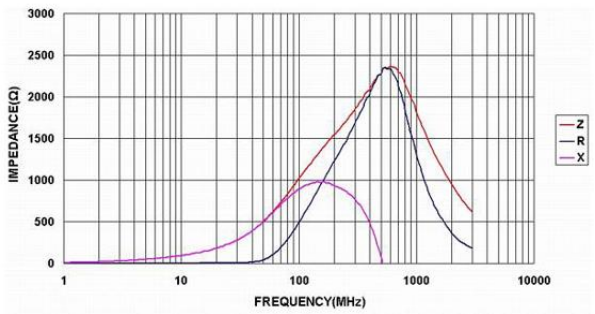


BBFJ00100505152Y00

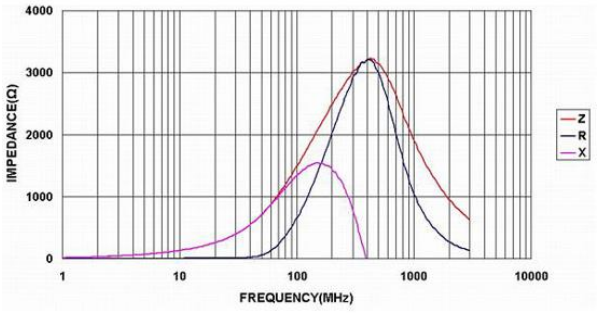


BBFJ00100505182Y00

