chanhvinh.com

EMI Common Mode Choke
Automotive Grade
AWCU Series

Overview

An EMI common mode choke (CMC) for power lines is a passive component specifically designed to suppress electromagnetic interference (EMI) in power supply circuits
A full series of common mode choke is designed for excellent noise attenuation with compact sizing for use in wide range of applications. Both standard series and custom designs are available.

Benefits

1. Automotive signal Line Common Mode Filter
2. Automotive CAN Bus Systems
3. Designed according the IEEE802.3 and IEC6228-3 standard
4. Operating temperature range－50°C～150°C

Applications

1. Automotive CAN Bus Systems
2. EMI solutions for charger
3. LVDS
4. Networking

Product Information

Series	Size Code (JIS/EIA)	Impedance(Ω)
AWCU	2012/0805 3216/1206 3325/1210 4532/1812	30 ~ 6500

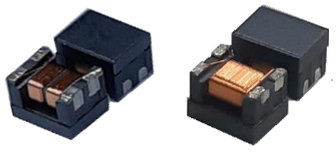

chanhvinh.com

YAGEO PULSE GROUP

AWCU00332523 Series Specification

AEC-Q200

1 Scope:

This specification applies to AWCU Wire Wound Common Mode Choke Coil

2 Part Numbering:

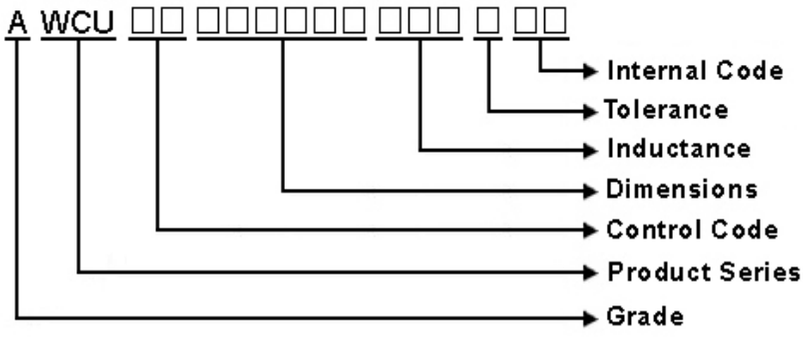

3 Rating:

Operating Temperature: - 50℃ ~ 150℃
(Including self - temperature rise)

Storage Temperature: - 40℃ ~ 125℃
(The storage temperature range is for after the assembly)

4 Marking:

No Marking

5 Standard Testing Condition

	Unless otherwise specified	In case of doubt
Temperature	Ordinary Temperature(15 to 35℃)	20 to 30℃
Humidity	Ordinary Humidity(25 to 85% RH)	50 to 80 %RH

chanhvinh.com

YAGEO PULSE GROUP

AWCU00332523 Series Specification

AEC-Q200

6 Configuration and Dimensions and Unit Weight:

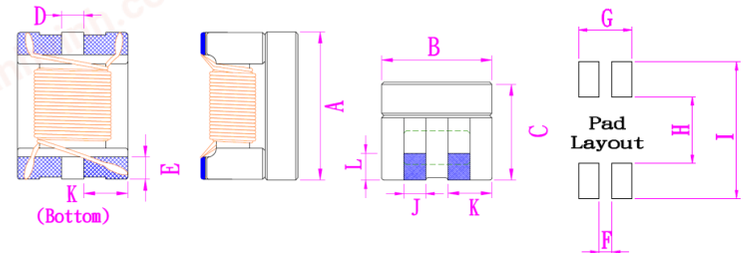

NO Polarity Equivalent circuit

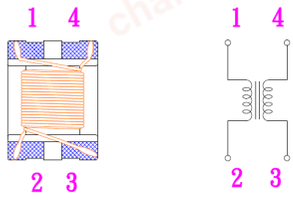

Dimensions in mm

TYPE	A	B	C	D	J	K	L	E	F	G	H	I
332523	3.3±0.2	2.5±0.2	2.3±0.2	0.5±0.1	0.5±0.1	1.0±0.1	0.6±0.25	0.6±0.1	0.4	1.6/2.5	2	4.1

Net Weight (grms)

SIZE CODE	Net Weight (grms)
332523	0.039(typ.)

7 Electrical Characteristics:

Part No.	Z(Ω) Min.(Typ.)	L(uH) +50/-30%	Stary Inductance (uH)Typ.	RDC (Ω)Max.	Irms (mA)Max.	Insulation Resistance (MΩ)Min.	Rated Voltage (Vdc)Max.	Tolerance (±%)
AWCU00332523110□T2	300(550)	11	0.05	0.4	300	10	80	X,T
AWCU00332523220□T2	500(1100)	22	0.06	0.5	250	10	80	X,T
AWCU00332523510□T2	1000(2600)	51	0.09	0.7	200	10	80	X,T
AWCU00332523101□T2	2200(5100)	100	0.13	1.5	150	10	80	X,T

NOTE: □-tolerance: tolerance X=+50%/-30% / T= +30%/-30%

1.Operating temperature range - 5 0℃~ 1 5 0℃(Including self - temperature rise)

2.Z Test Frequency : 10MHz,0.1V

3.L Test Frequency : 100kHz,0.1V

4.Stary Inductance : 100kHz,0.1V

5.RDC: SINGLE WIRE TEST VALUE

6.Irms for a 15℃ temperature rise from 25℃ ambient.

7.weight: 0.039(g) typ.

chanhvinh.com

YAGEO PULSE GROUP

AWCU00332523 Series Specification

AEC-Q200

8 AWCU00332523 Series

8.1 Construction:

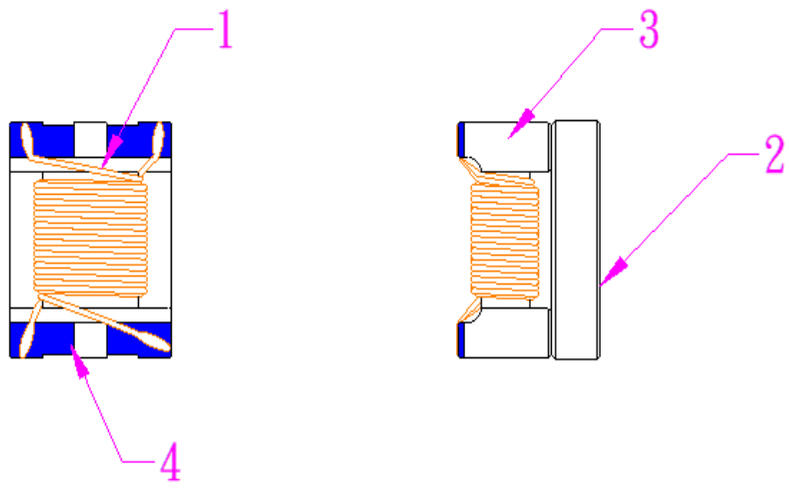

8.2 Material List:

NO	PART	MATERIAL
1	WIRE	Grade 180
2	COVER SHEET	FERRITE CORE
3	CORE	FERRITE CORE
4	TERMINAL	Ag/Cu/Ni/Sn

chanhvinh.com

YAGEO PULSE GROUP

AWCU00332523 Series Specification

AEC-Q200

9 Reliability of Common Mode Choke

1-1.Mechanical Performance

	Item	Specification	Test Method
1-1-1	Board Flex	The forces applied on the right conditions must not damage the terminal electrode and the ferrite.	Test device shall be soldered on the substrate Substrate Dimension: 100x40x1.6mm Deflection: 2.0mm Keeping Time: 60 sec 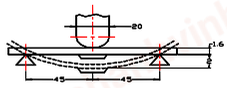
1-1-2	Terminal Strength	The chip must not damage the terminal electrode and the ferrite.	Appendix 1 Note(AEC-Q200-005):Force of 2Lbs for 60 seconds.
1-1-3	Solderability	The electrodes shall be at least 95% covered with new solder coating.	Pre-heating: 150℃, 1min Solder Composition: Sn/3.0Ag/0.5Cu Solder Temperature: 245±5℃ Immersion Time: 4±1sec
1-1-4	Resistance to Soldering Heat	Appearance:No damage Inductance change shall be within ±20%.	Pre-heating: 150℃, 1min Solder Composition: Sn/Ag3.0/Cu0.5 Solder Temperature: 260±5℃ Immersion Time: 10±1sec
1-1-5	Resistance to Solvents	There must be no change in appearance or obliteration of marking.	Inductors must withstand 6 minutes of alcohol or water.
1-1-6	Mechanical Shock	The forces applied on the right conditions must not damage the terminal electrode and the ferrite.	Pulse shape：Half-sine waveform Impact acceleration：100 g Pulse duration：6 ms Number of shocks：18 shocks (3 shocks for each face) Orientation：Bottom, top, left, right, front and rear faces
1-1-7	Vibration	Appearance:No damage Inductance change shall be within ±20%.	Vibration waveform: Sine waveform Vibration frequency: 10Hz~2000Hz Vibration acceleration: 5g Sweep rate: 0.764386otcave/minute Duration of test: 12 cycles each of 3 orientations 20 minutes for each cycle Vibration axes: X, Y & Z

1-2.Environmental Performance

No	Item	Specification	Test Method
1-2-1	High Temperature Exposure (Storage)	Appearance:No damage (for microscope of CASTOR MZ-45 20X)Inductance change shall be within ±20%.	Temperature: 150±3℃ Time: 1000hrs Measured after exposure in the room condition for 24hrs
1-2-2	Low Temperature Exposure (Storage)		Temperature: -50±3℃ Time: 1000hrs Measured after exposure in the room condition for 24hrs
1-2-3	Biased Humidity		Temperature: 85±2℃ Relative Humidity: 85% Time: 1000hrs Measured after exposure in the room condition for 24hrs
1-2-4	Temperature Cycling		Total cycles: 1000 cycles Temperature Cycling Test Conditions : -50 to +150℃ Soak Mode Condition： 30 minutes Measured after exposure in the room condition for 24hrs
1-2-5	Operational Life		Temperature: 150±2℃ Appliend Current : Rated Current Time: 1000± 24 hrs Measured after exposure in the room condition for 24hrs
1-2-6	ESD		Test mode：Contact Discharge Discharge level：±6KV, Discharge interval：1 second Polarity of the output voltage：Positive and negative Number of discharge：Discharge +/- for 1 time for the 2 test points.
			Test Mode：Air Discharge Discharge level：±12KV, ±16KV, ±25KV Discharge interval：＜5 seconds Polarity of the output voltage：Positive and negative Number of discharge：Discharge +/- for 1 time for the 1~2 test points.

chanhvinh.com

YAGEO PULSE

AWCU00332523 Series Specification

AEC-Q200

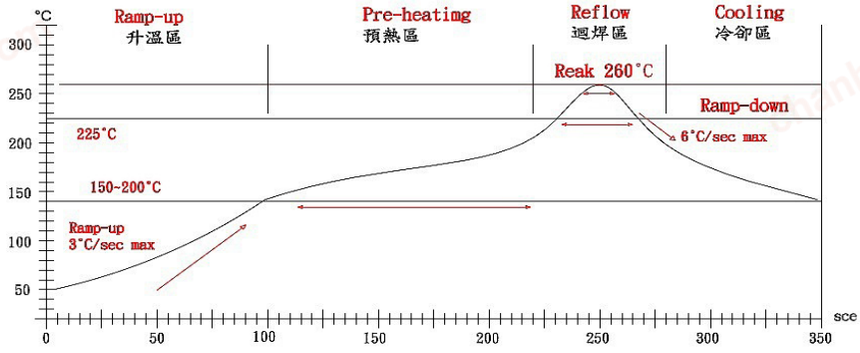

Reflow profile

Lead-Free(LF)標準溫度分析範圍 Refer to J-STD-020C

管制項目 Item.	升溫區 Ramp-up	預熱區 Pre-heating	迴焊區 Reflow	Peak Temp	冷卻區 Cooling
溫度範圍 Temp.scope	R.T ~ 150℃	150℃ ~ 200℃	Above 217°C	260±5℃	Peak Temp.~150℃
標準時間 Time spec.	-	60 ~ 180 sec	60 ~ 150 sec	20 ~ 40 sec	-
實際時間 Time result	-	75 ~ 100 sec	90 ~ 120 sec	20 ~ 35 sec	-

NOTE:

1.Re-flow possible times : within 3 times
2.Nitrogen adopted is recommendes while in re-flow
3.Products can only be soldered with reflow

chanhvinh.com

AWCU00332523 Series Specification

AEC-Q200

10 Packaging:

10.1 Packaging -Cover Tape

The force for tearing off cover tape is 10 to 130 grams in the arrow direction.

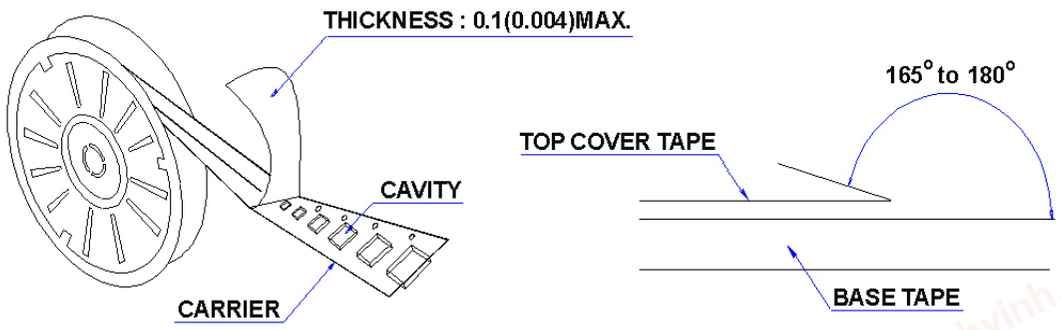

10.2 Packaging Quantity

TYPE	PCS/REEL
332523	1500

10.3 Reel Dimensions

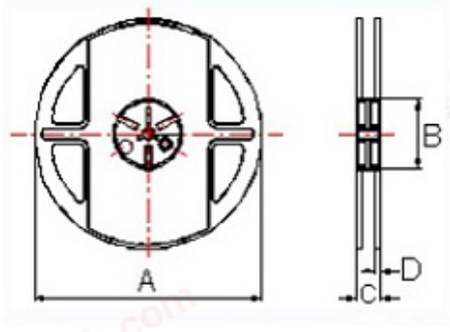

Dimensions in mm

TYPE	A	B	C	D
332523	178±1	60±0.5	16±0.5	1.4±0.5

chanhvinh.com

AWCU00332523 Series Specification

AEC-Q200

10 Packaging:

10.4 Tape Dimensions in mm

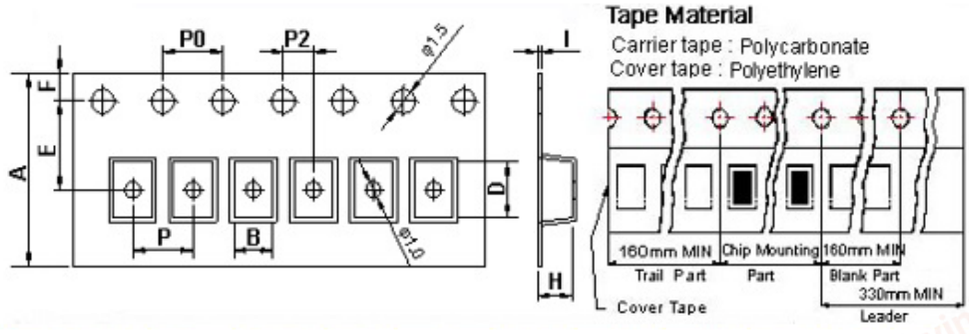

TYPE	A	B	D	E	F	H	I	P	P0	P2
332523	12	2.72	3.52	5.5	1.75	2.45	0.25	4	4	2

11 Recommended Land Pattern:

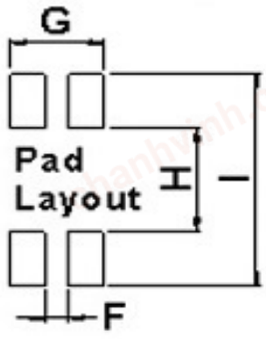

Dimensions in mm

TYPE	F	G	H	I
332523	0.4	1.6/2.5	2	4.1

12 Note:

1. Please make sure that your product has been evaluated and confirmed against your specifications when our product is mounted to your product.
2. Do not knock nor drop.
3. All the items and parameters in this product specification have been prescribed on the premise that our product is used for the purpose,under the condition and in the environment agreed upon between you and us. You are requested not to use our product deviating from such agreement.
4. The storage period is less than 12 months. Be sure to follow the storage conditions (Temperature: 5 to 40°C, Humidity: 10 to 75% RHor less).
   If the storage period elapses, the soldering of the terminal electrodes may deteriorate.
5. Do not use or store in locations where there are conditions such as gas corrosion (salt, acid, alkali, etc.).
6. The moisture sensitivity level (MSL) of products is classified as level 1.

chanhvinh.com

AWCU00332523 Series Specification

AEC-Q200

13 Graph:

