chanhvinh.com

Power Inductor
Automotive Grade
APCF Series

Overview

Power inductors are passive electronic components used in various circuits to store energy in a magnetic field when electrical current flows through them. They are critical in filtering, energy storage, and noise suppression in power electronic systems.
They are designed to handle higher currents and are optimized for minimal power loss and thermal efficiency.

Benefits

1. Automotive grade available
2. High inductance 1000~μH
3. Ferrite SMD Shielded Type
4. No thermal aging

Applications

1. Automotive Systems for Dashboard, CCD Module
2. Media player
3. Net working
4. Lighting, LCD Panel/TV

Product Information

Series	L (mm)	W(mm)	T (mm)	Inductance (μH)
APCF	7.0	7.0	3.2	1 ~ 1500
	7.0	7.0	4.5	
	10.0	10.0	4.5	
	12.5	12.5	6.5	
	12.5	12.5	7.5	



chanhvinh.com

APCF00070745 Series Specification

AEC-Q200

1 Scope:

This specification applies to the Pb Free high current type SMD inductors

2 Part Numbering:

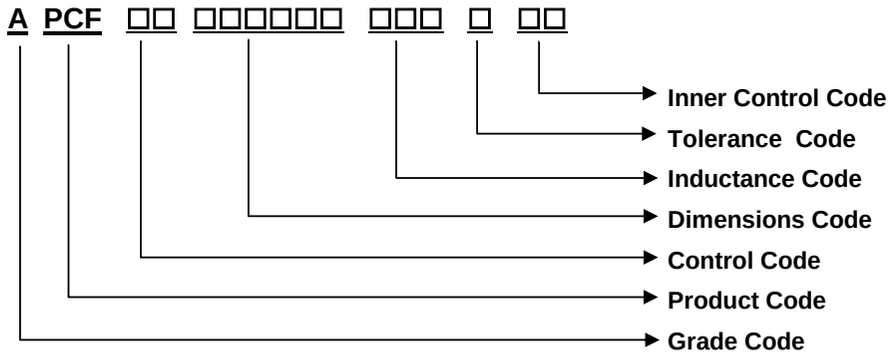

3 Rating:

Operating Temperature range:	**-55°C ~ +150°C (Including self temp. rise)**
Storage Temperature range:	**-55°C ~ +150°C (For after the circuit board is mounted)**
Storage Temperature:	**-20°C ~ +40°C; 75% RH max. (stored in carrier tape)**

4 Standard Testing Condition:

	Unless otherwise specified	In case of doubt
Temperature	Ordinary Temperature(15 to 35℃)	20 to 30°C
Humidity	Ordinary Humidity(25 to 85% RH)	50 to 80 %RH

5 Configuration and Dimensions:

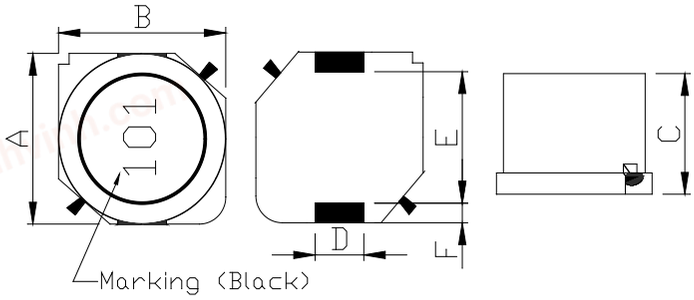

A: 7.00±0.3	**mm**
B: 7.00±0.3	**mm**
C: 4.50±0.3	**mm**
D: 2.00±0.2	**mm**
E: 4.00Typ.	**mm**
F: 1.50Typ.	**mm**

Net Weight (grms)

SIZE CODE	Net Weight (grms)
070745	0.60 (Typ.)

chanhvinh.com

YAGEO PULSE GROUP

APCF00070745 Series Specification

AEC-Q200

6 Electrical Characteristics:

Part No.	Inductance L(μH)	Test Freq.	Resistance RDC(Ω) ±20%	Rated DC Current Isat(A)	Rated DC Current Irms(A)	Tolerance	Marking
APCF000707451R0□00	1.0	100kHz/0.5V	11m	4.50	4.50	M,T	1R0
APCF000707452R2□00	2.2	100kHz/0.5V	15m	3.40	3.30	M,T	2R2
APCF000707453R3□00	3.3	100kHz/0.5V	20m	2.50	2.30	M,T	3R3
APCF000707454R7□00	4.7	100kHz/0.5V	30m	2.00	2.10	M,T	4R7
APCF000707456R8□00	6.8	100kHz/0.5V	39m	1.70	1.74	M,T	6R8
APCF00070745100□00	10	100kHz/0.5V	36m	1.30	1.78	M,T	100
APCF00070745150□00	15	100kHz/0.5V	52m	1.10	1.53	M,T	150
APCF00070745220□00	22	100kHz/0.5V	61m	0.90	1.34	M,T	220
APCF00070745330□00	33	100kHz/0.5V	96m	0.82	1.09	M,T	330
APCF00070745470□00	47	100kHz/0.5V	0.125	0.75	0.92	M,T	470
APCF00070745680□00	68	100kHz/0.5V	0.175	0.60	0.77	M,T	680
APCF00070745101□00	100	100kHz/0.5V	0.25	0.50	0.65	K,M	101
APCF00070745151□00	150	100kHz/0.5V	0.34	0.40	0.55	K,M	151
APCF00070745221□00	220	100kHz/0.5V	0.52	0.33	0.45	K,M	221
APCF00070745331□00	330	100kHz/0.5V	0.74	0.25	0.37	K,M	331
APCF00070745471□00	470	100kHz/0.5V	1.05	0.22	0.31	K,M	471
APCF00070745681□00	680	100kHz/0.5V	1.48	0.20	0.27	K,M	681
APCF00070745102□00	1000	100kHz/0.5V	2.28	0.14	0.25	K,M	102

NOTE: tolerance M=±20%

1. Isat： Based on inductance change (△L/Lo： drop 15% Max.) @ambient temperature 25℃
2. Irms： Based on temperature rise (△T： 25°C Typ.)
3. Rated DC Current： The less value which is Isat or Irms.

chanhvinh.com

6 6.1 Construction:

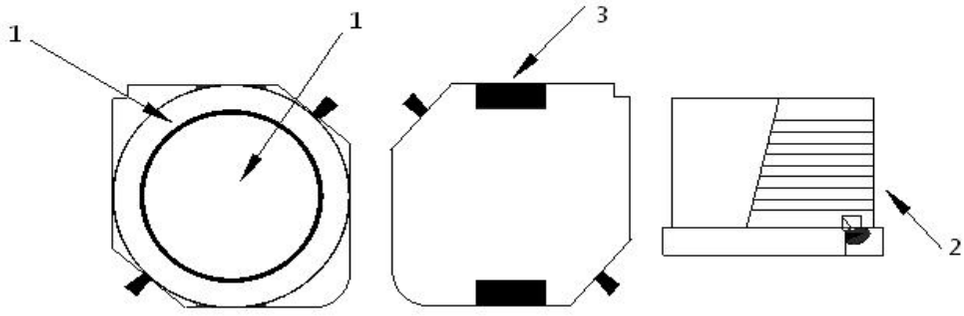

6.2 Material List:

NO.	ITEM	DESCRIPTION & TYPE
1	Core	Ferrite
2	Wire	Magnet Wire (P180)
3	Terminal	Terminal Copper

chanhvinh.com

YAGEO PULSE GROUP

APCF00070745 Series Specification

AEC-Q200

ELECTRICAL

TEST ITEM	SPECIFICATION	TEST DETAILS
Insulation resistance	There shall be no other damage or problems.	DC 100V voltage shall be applied across this sample of top surface and the terminal. The insulation resistance shall be more than 1×10^8 Ω.
Dielectric withstand voltage	There shall be no other damage or problems.	AC 100V voltage shall be applied for 1 minute acrosset the top surface and the terminal of this sample
Temperature characteristics	△L/L20℃≦±10% 0～2000 ppm/℃	The test shall be performed after the sample has stabilized in an ambient temperature of -20 to +85℃,and the value calculated based on the value applicable in a normal temperature and narmal humidity shall be △L/L20℃≦±10%.

MECHANICAL

TEST ITEM	SPECIFICATION	TEST DETAILS
High Temperature Exposure (Storage)	1.△L/Lo≦±10% 2. Appearance-No damage (OM)	Refer to MIL-STD-202 Method 108 1.preconditioning :reflow 3 times. 2.1000hrs. at rated operating temperature, part can be stored for 1000 hrs. @ 150°C. Unpowered. Measurement at 24±4 hours after test conclusion.
Temperature Cycling	1.△L/Lo≦±10% 2. Appearance-No damage (OM)	Refer to JESD22 Method JA-104 1.preconditioning :reflow 3 times. 2.1000 cycles (-55°C to +150°C). Measurement at 24±4 hours after test conclusion. 30min maximum dwell time at each temperature extreme. 1 min. maximum transition time.
Biased Humidity	1.△L/Lo≦±10% 2. Appearance-No damage (OM)	Refer to MIL-STD-202 Method 103 1.preconditioning :reflow 3 times. 2.1000 hrs 85°C/85%RH. Unpowered. Measurement at 24±4 hours after test conclusion.
Operational Life	1.△L/Lo≦±10% 2. Appearance-No damage (OM)	Refer to MIL-PRF-27 1.preconditioning :reflow 3 times. 2.1000 hrs. @150 °C. Measurement 24±4 hours after test conclusion.
Physical Dimensions	Product spec	Refer to JESD22-B100 Verify physical dimensions to the applicable device detail specification.

chanhvinh.com

MECHANICAL

TEST ITEM	SPECIFICATION	
Resistance to Solvent	1. Marking -No constitute failure 2. No damage or degradation that has occurred due to solvent	Refer to MIL-STD-202 Method 215 Immersion 3+0.5/-0 minutes in Terpene defluxer. Brush 10 strokes (wet bristle) 2 to 3 oz. Rinse in water. Air blow dry.
Mechanical Shock	1. △L/Lo≦±10% 2.Appearance-No damage (OM)	MIL-STD-202 Method 213 Units are non-operating. Pulse shape : Half-sine waveform Impact acceleration : 100 g's Pulse duration : 6 ms Number of shocks : 18 shocks (3 shocks for each face)
Vibration	1.△L/Lo≦±10% 2.Appearance-No damage (OM)	MIL-STD-202 Method 204 5 g's for 20 minutes, 12 cycles each of 3 orientations. Test from 10-2000Hz.
Resistance to Soldering heat (reflow soldering)	1. △L/Lo≦±10% 2. Appearance-No damage (OM)	Temperature profile of reflow soldering 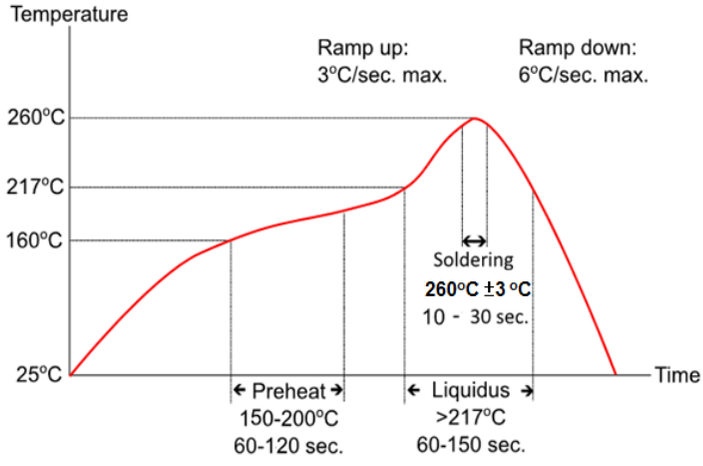 Refer to MIL-STD-202 Method 210 SMD: Condition K, time above 217°C, 60s – 150s, 3Cycles
Solderability	All terminations shall exhibit a continuous solder coating free from defects for a minimum of 95% of the critical area of any individual termination.	Refer to J-STD-002 For both Leaded & SMD. Electrical Test not required. Magnification 30X. Conditions: SMD: a) Method B1 @ 245°C, 5+0/-0.5 s. b) Method D @ 260°C, 30+5/-0 s.

chanhvinh.com

ENVIRONMENT CHARACTERISTICS

TEST ITEM	SPECIFICATION	TEST DETAILS
Board Flex	1.△L/Lo≦±10% 2.No Crack	Refer to AEC-Q200-005 Bend the board (D) X =2mm, 60sec minimum holding time. 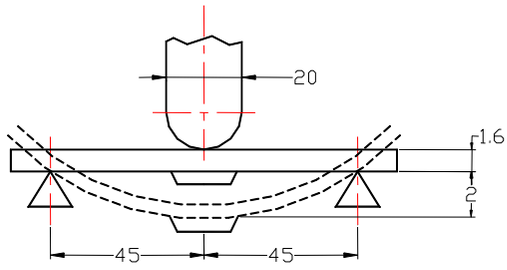
Terminal Strength	1.△L/Lo≦±10% 2. Appearance-No damage (OM)	Refer to AEC-Q200-006 Apply a 1.8Kg force to the side of a device bending tested. The force shall be applied for 60+1 seconds.
Electrical Characterization	User Specification.	Parametrically test per lot and sample size requirements. Summary to show minimum, maximum, meanand standard deviation at room, minimum andmaximum operating temperatures.
ESD		Refer to AEC-Q200-002 or ISO/DIS 10605 Refer to attachment third party report
Flammability	The marking and A side have no obvious broken, and the marking are clearly	Refer to UL 94 Burning stops within 10 seconds on a vertical specimen; drips of particles allowed as long as they are not inflamed.

chanhvinh.com

7 Packaging:

7.1 Packaging -Cover Tape

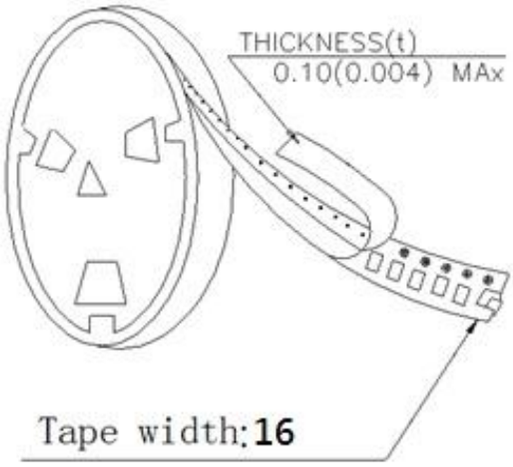

7.2 Packaging Quantity

TYPE	PCS/REEL
APCF00070745	1000

7.3 Reel Dimensions

Unit : mm

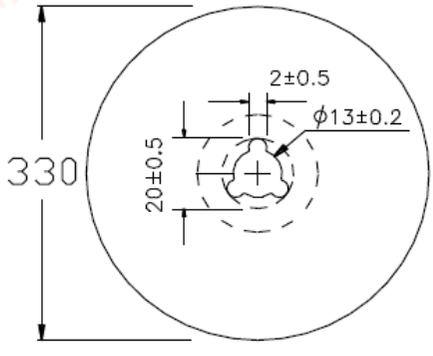

chanhvinh.com

7 Packaging:

7.4 Tape Dimensions in mm

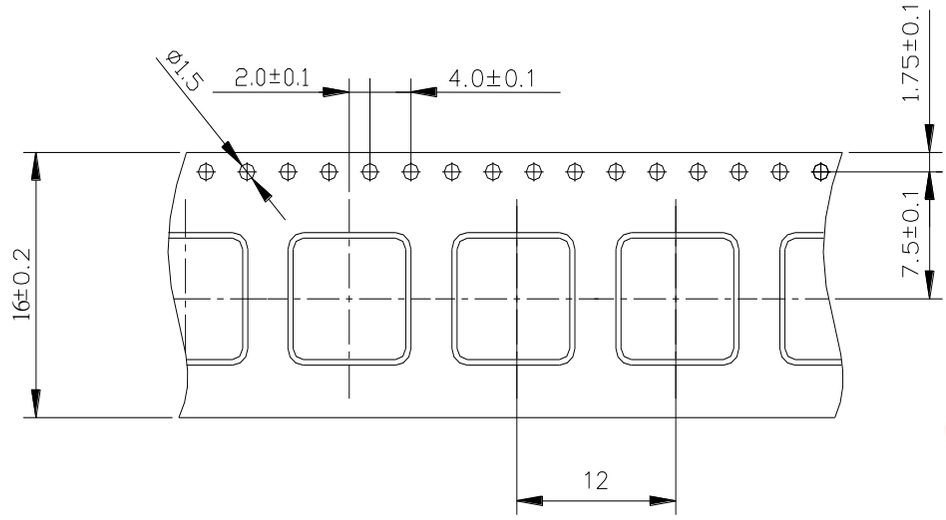

Unreeling Direction

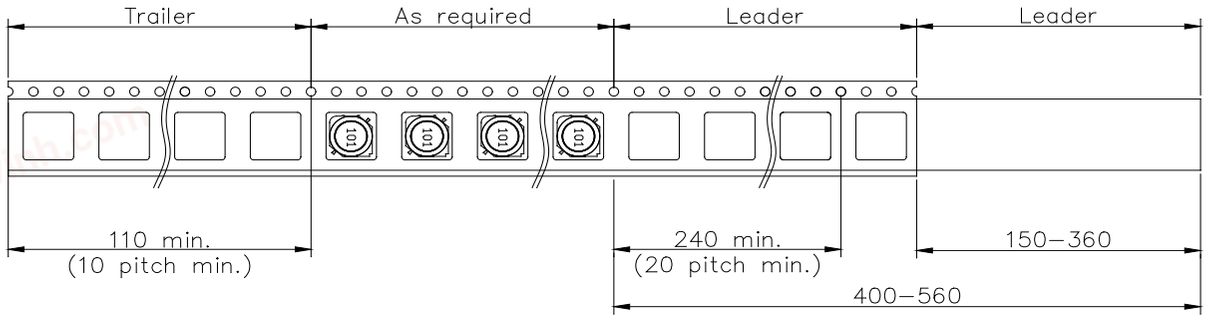

8 Recommended Land Pattern:

(STANDARD PATTERN) Unit : mm

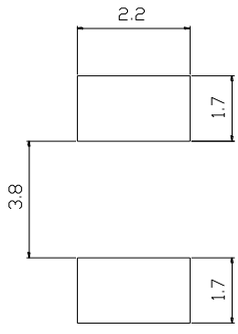

chanhvinh.com

9 Note:

1. Please make sure that your product has been evaluated and confirmed against your specifications when our product is mounted to your product.
2. Do not knock or drop.
3. All the items and parameters in this product specification have been prescribed on the premise that our product is used for the purpose,under the condition and in the environment agreed upon between you and us. You are requested not to use our product deviating from such agreement.
4. Please keep the distance between transformer/coil and other components
   (refer to the standard IEC 950)
5. The moisture sensitivity level (MSL) of products is classified as level 1.
6. Suggestion
   On customer side this product series need to be fixed by the glue after IR reflow.
   Please refer to below example photo:

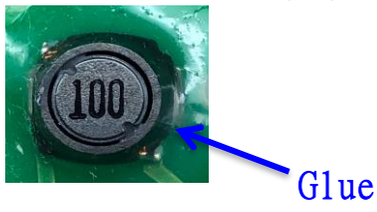

chanhvinh.com

APCF00070745 Series Specification

TYPICAL ELECTRICAL CHARACTERISTICS

INDUCTANCE vs. DC CURRENT
@100KHz/0.1V

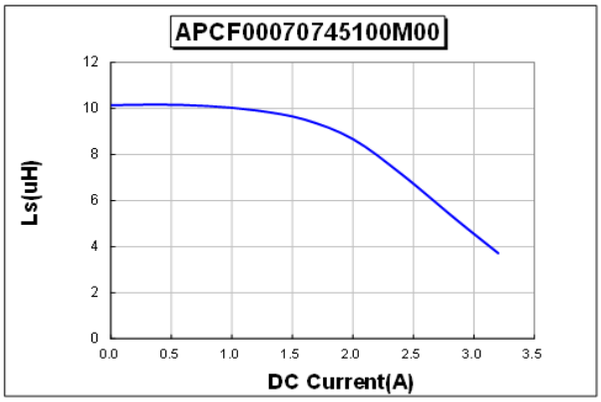

INDUCTANCE vs. FREQUENCY

