chanhvinh.com

Pulse A YAGEO Company | LARSEN Antennas

TECHNICAL DATA SHEET

Description: 8010 2.4GHz Chip Antenna

PART NUMBER: ANT8010LL04R2400A



Features:

- Size : 8.0x1.0x1.0 mm
- Omni-directional radiation
- Tape & reel automatic mounting
- Reflow process compatible
- RoHS compliant

Applications:

- 2.4GHz WiFi device
- Bluetooth gadget
- Zigbee device
- ISM band equipment

In the effort to improve our products, we reserve the right to make changes judged to be necessary.
CONFIDENTIAL AND PROPRIETARY INFORMATION
This document contains confidential and proprietary information of Pulse Electronics, Inc. (Pulse) and is protected by copyright, trade secret and other state and federal laws. Its receipt or possession does not convey any rights to reproduce, disclose its contents, or to manufacture, use or sell anything it may describe. Reproduction, disclosure or use without specific written authorization of Pulse is strictly forbidden.
For more information:

Pulse Worldwide Headquarters
15255 Innovation Drive #100
San Diego, CA 92128
USA
Tel:1-858-674-8100

Pulse/Larsen Antennas
18110 SE 34th St Bldg 2 Suite 250
Vancouver, WA 98683
USA
Tel: 1-360-944-7551

Europe Headquarters
Pulse GmbH & Do, KG
Zeppelinstrasse 15
Herrenberg, Germany
Tel: 49 7032 7806 0

Pulse (Suzhou) Wireless Products Co, Inc.
99 Huo Ju Road(#29 Bldg,4th Phase
Suzhou New District
Jiangsu Province, Suzhou 215009 PR China
Tel: 86 512 6807 9998

chanhvinh.com

Pulse | LARSEN Antennas
A YAGEO Company

TECHNICAL DATA SHEET

Description: 8010 2.4GHz Chip Antenna

PART NUMBER: ANT8010LL04R2400A

ELECTRICAL SPECIFICATIONS

Working Frequency	2.4 ~ 2.5 GHz
Bandwidth	170 MHz(Typ.)
Return Loss	10.0 dB Min
Polarization	Linear
Azimuth Beamwidth	Omni-directional
Peak Gain	5.46 dBi(Typ.)
Impedance	50 Ω
Operating Temperature	- 40~105 ℃
Maximum Power	1 W
Termination	Ni / Sn (Environmentally-Friendly Leadless)
Resistance to Soldering Heats	260℃ , 10sec.

NOTE
1. The specification is defined on Pulse evaluation board

MECHANICAL DRAWING

	Dimension
L (mm)	1.00 ±0.10
W (mm)	8.00 ±0.10
T (mm)	1.00 ±0.10
C (mm)	0.90 ±0.15



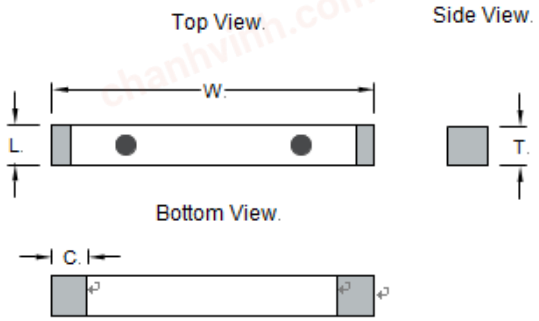

Terminal name	Function
S1	Feeding / Soldering Pad
S2	Soldering / Feeding Pad

In the effort to improve our products, we reserve the right to make changes judged to be necessary.
CONFIDENTIAL AND PROPRIETARY INFORMATION
This document contains confidential and proprietary information of Pulse Electronics, Inc. (Pulse) and is protected by copyright, trade secret and other state and federal laws. Its receipt or possession does not convey any rights to reproduce, disclose its contents, or to manufacture, use or sell anything it may describe. Reproduction, disclosure or use without specific written authorization of Pulse is strictly forbidden.

RoHS COMPLIANT

chanhvinh.com

Pulse | LARSEN Antennas
A YAGEO Company

TECHNICAL DATA SHEET

Description: 8010 2.4GHz Chip Antenna

PART NUMBER: ANT8010LL04R2400A

REFERENCE DESIGN OF EVALUATION BOARD

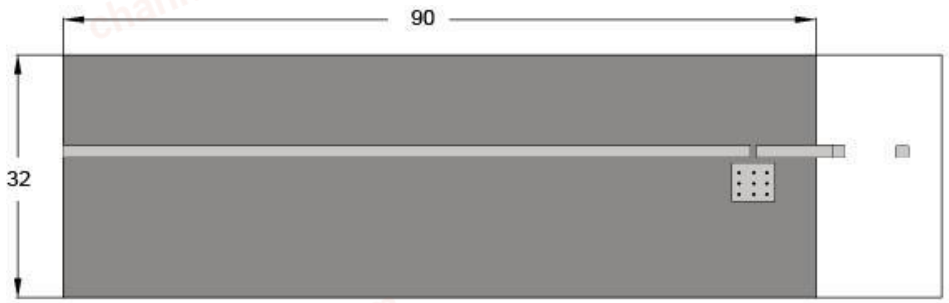

Unit : mm

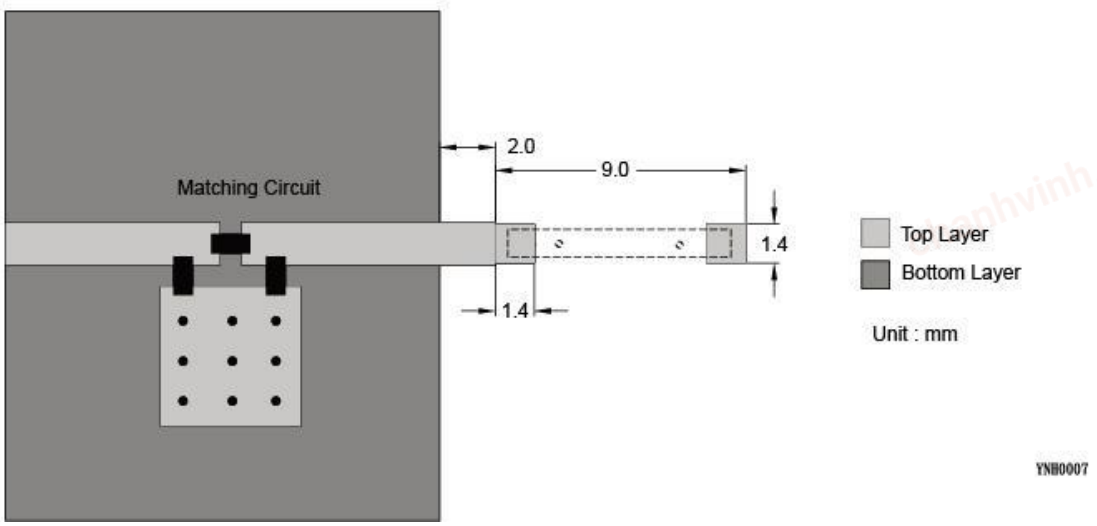

Outlook and dimension of evaluation board

Footprint

In the effort to improve our products, we reserve the right to make changes judged to be necessary.
CONFIDENTIAL AND PROPRIETARY INFORMATION
This document contains confidential and proprietary information of Pulse Electronics, Inc. (Pulse) and is protected by copyright, trade secret and other state and federal laws. Its receipt or possession does not convey any rights to reproduce, disclose its contents, or to manufacture, use or sell anything it may describe. Reproduction, disclosure or use without specific written authorization of Pulse is strictly forbidden.

chanhvinh.com

Pulse | LARSEN Antennas
A YAGEO Company

TECHNICAL DATA SHEET

Description: 8010 2.4GHz Chip Antenna

PART NUMBER: ANT8010LL04R2400A

ELECTRICAL PERFORMANCES

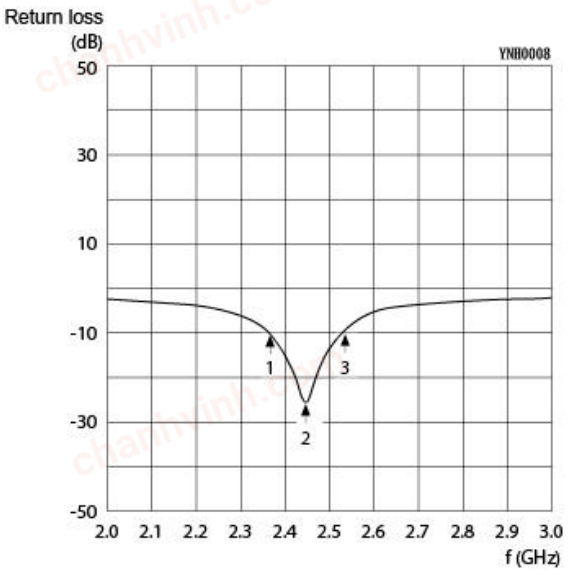

Marker data
1. 2.37GHz, -10dB
2. 2.45GHz, -24.9dB
3. 2.54GHz, -10dB

Return loss

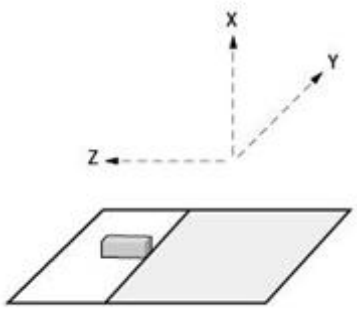

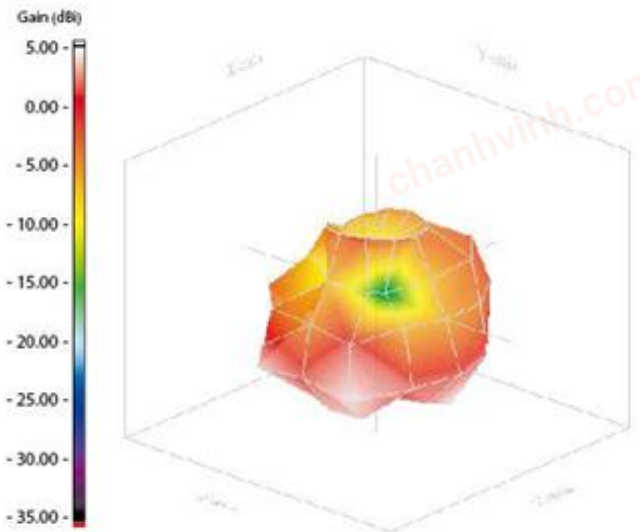

Max gain = 5.46 dBi, at (150,150)
MEG (mean effective gain) =-1.46 dBi
Directivity (dB) = 6.78
Efficiency = -1.32 dB, 73.73 %

Evaluation board and XYZ direction

Radiation pattern

In the effort to improve our products, we reserve the right to make changes judged to be necessary.
CONFIDENTIAL AND PROPRIETARY INFORMATION
This document contains confidential and proprietary information of Pulse Electronics, Inc. (Pulse) and is protected by copyright, trade secret and other state and federal laws. Its receipt or possession does not convey any rights to reproduce, disclose its contents, or to manufacture, use or sell anything it may describe. Reproduction, disclosure or use without specific written authorization of Pulse is strictly forbidden.

chanhvinh.com

Pulse | LARSEN Antennas
A YAGEO Company

TECHNICAL DATA SHEET

Description: 8010 2.4GHz Chip Antenna

PART NUMBER: ANT8010LL04R2400A

REVISION HISTORY

Revision	Date	Description
Version 1	Oct. 12, 2020	- New issue

In the effort to improve our products, we reserve the right to make changes judged to be necessary.
CONFIDENTIAL AND PROPRIETARY INFORMATION
This document contains confidential and proprietary information of Pulse Electronics, Inc. (Pulse) and is protected by copyright, trade secret and other state and federal laws. Its receipt or possession does not convey any rights to reproduce, disclose its contents, or to manufacture, use or sell anything it may describe. Reproduction, disclosure or use without specific written authorization of Pulse is strictly forbidden.

RoHS COMPLIANT