chanhvinh.com

Pulse | LARSEN Antennas
A YAGEO Company

TECHNICAL DATA SHEET

Description: 18184+25254 GNSS&L2L5 Stack Patch Antenna

PART NUMBER : ANT1825BS0XTGN25S

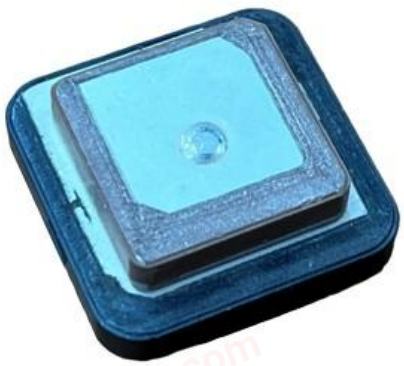

Features:

- Size : Stack 18x18x4+25x25x4mm
- High radiation efficiency
- Combining GNSS and L2L5 bands
- Pin-solder process
- RoHS compliant

Applications:

- GNSS and L2L5 system
- Navigation device
- Telematics box
- Fleet management

In the effort to improve our products, we reserve the right to make changes judged to be necessary.
CONFIDENTIAL AND PROPRIETARY INFORMATION
This document contains confidential and proprietary information of Pulse Electronics, Inc. (Pulse) and is protected by copyright, trade secret and other state and federal laws. Its receipt or possession does not convey any rights to reproduce, disclose its contents, or to manufacture, use or sell anything it may describe. Reproduction, disclosure or use without specific written authorization of Pulse is strictly forbidden.
For more information:

Pulse Worldwide Headquarters
15255 Innovation Drive #100
San Diego, CA 92128
USA
Tel:1-858-674-8100

Pulse/Larsen Antennas
18110 SE 34th St Bldg 2 Suite 250
Vancouver, WA 98683
USA
Tel: 1-360-944-7551

Europe Headquarters
Pulse GmbH & Do, KG
Zeppelinstrasse 15
Herrenberg, Germany
Tel: 49 7032 7806 0

Pulse (Suzhou) Wireless Products Co, Inc.
99 Huo Ju Road(#29 Bldg,4th Phase
Suzhou New District
Jiangsu Province, Suzhou 215009 PR China
Tel: 86 512 6807 9998

chanhvinh.com

Pulse | LARSEN Antennas
A YAGEO Company

TECHNICAL DATA SHEET

Description: 18184+25254 GNSS&L2L5 Stack Patch Antenna

PART NUMBER : ANT1825BS0XTGN25S

ELECTRICAL SPECIFICATIONS

Working Frequency	L5 : 1176 MHz L2 : 1227 MHz GNSS-Beidou : 1561 MHz GNSS-GPS : 1575 MHz GNSS-Glonass : 1602 MHz
Gain(Peak)	L5: 2.3 dBi L2 : 2.8 dBi GNSS Beidou : 3.4 dBic GNSS GPS : 3.6 dBic GNSS Glonass : 4.2 dBic
Gain(Average)	L5: -1.84 dB L2 : -1.54 dB GNSS Beidou : -1.77 dB GNSS GPS : -1.48 dB GNSS Glonass : -1.06 dB
Polarization	L5 & L2 : LP GNSS : RHCP
Axial Ratio	GNSS Beidou ≦ 11 dB GNSS GPS ≦ 13 dB GNSS Glonass ≦ 19 dB
Impedance	50 Ω
Operating Temperature	-40 ~ 105 ℃

NOTE
1. Based on 70×70 mm² square ground plane.
2. Centre frequency will be offset to working frequency while changes of customer's housing and ground plane.

In the effort to improve our products, we reserve the right to make changes judged to be necessary.
CONFIDENTIAL AND PROPRIETARY INFORMATION
This document contains confidential and proprietary information of Pulse Electronics, Inc. (Pulse) and is protected by copyright, trade secret and other state and federal laws. Its receipt or possession does not convey any rights to reproduce, disclose its contents, or to manufacture, use or sell anything it may describe. Reproduction, disclosure or use without specific written authorization of Pulse is strictly forbidden.

RoHS COMPLIANT

chanhvinh.com

Pulse | LARSEN Antennas
A YAGEO Company

TECHNICAL DATA SHEET

Description: 18184+25254 GNSS&L2L5 Stack Patch Antenna

PART NUMBER : ANT1825BS0XTGN25S

MECHANICAL DRAWING

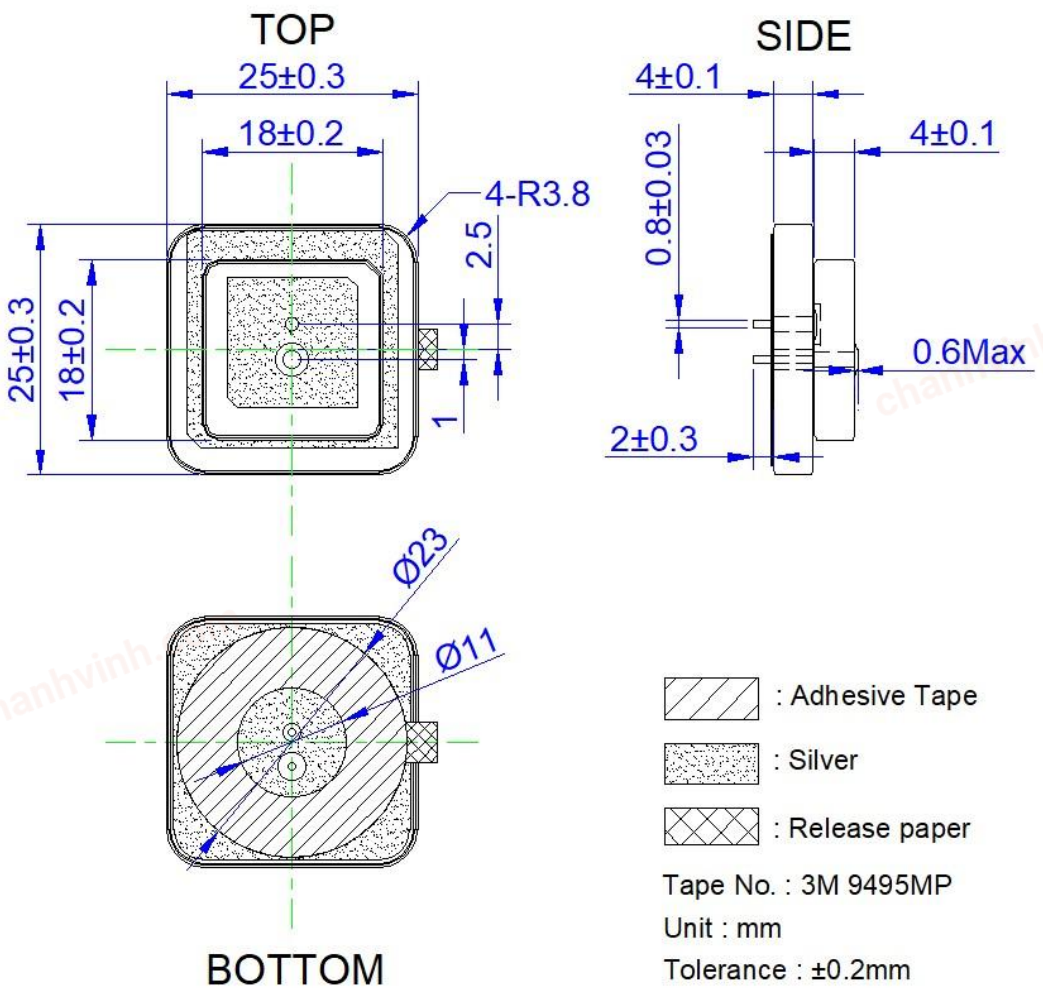

Position	Dimension	Working Band	Feed
Upper	18x18x4 mm	GNSS (1561+1575+1602MHz)	Single Feed
Bottom	25x25x4 mm	L5 & L2 (1176MHz & 1227MHz)	Single Feed

In the effort to improve our products, we reserve the right to make changes judged to be necessary.
CONFIDENTIAL AND PROPRIETARY INFORMATION
This document contains confidential and proprietary information of Pulse Electronics, Inc. (Pulse) and is protected by copyright, trade secret and other state and federal laws. Its receipt or possession does not convey any rights to reproduce, disclose its contents, or to manufacture, use or sell anything it may describe. Reproduction, disclosure or use without specific written authorization of Pulse is strictly forbidden.

RoHS COMPLIANT

chanhvinh.com

Pulse | LARSEN Antennas
A YAGEO Company

TECHNICAL DATA SHEET

Description: 18184+25254 GNSS&L2L5 Stack Patch Antenna

PART NUMBER : ANT1825BS0XTGN25S

REFERENCE DESIGN OF EVALUATION BOARD

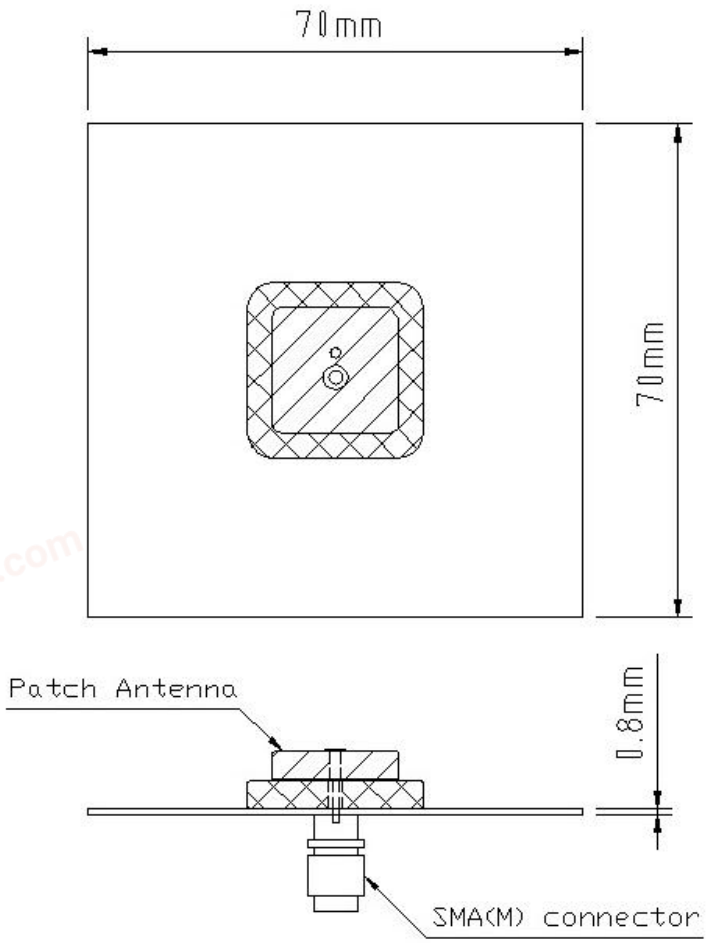

Ground Plane Size: 70x70 mm²

In the effort to improve our products, we reserve the right to make changes judged to be necessary.
CONFIDENTIAL AND PROPRIETARY INFORMATION
This document contains confidential and proprietary information of Pulse Electronics, Inc. (Pulse) and is protected by copyright, trade secret and other state and federal laws. Its receipt or possession does not convey any rights to reproduce, disclose its contents, or to manufacture, use or sell anything it may describe. Reproduction, disclosure or use without specific written authorization of Pulse is strictly forbidden.

chanhvinh.com

Pulse | LARSEN Antennas
A YAGEO Company

TECHNICAL DATA SHEET

Description: 18184+25254 GNSS&L2L5 Stack Patch Antenna

PART NUMBER : ANT1825BS0XTGN25S

FOOTPRINT

Top View

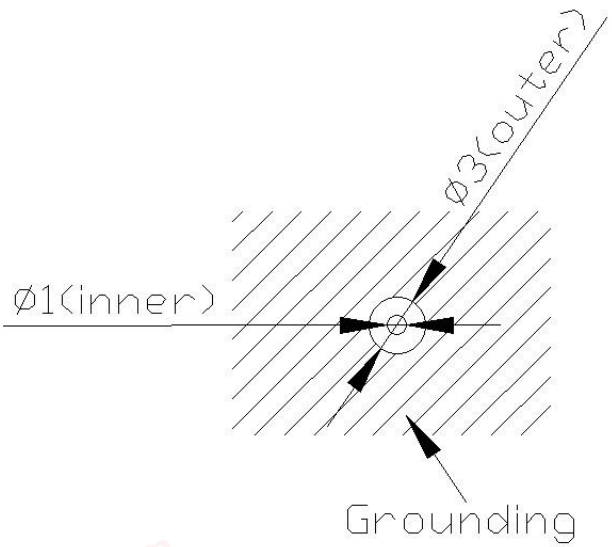

Bottom View

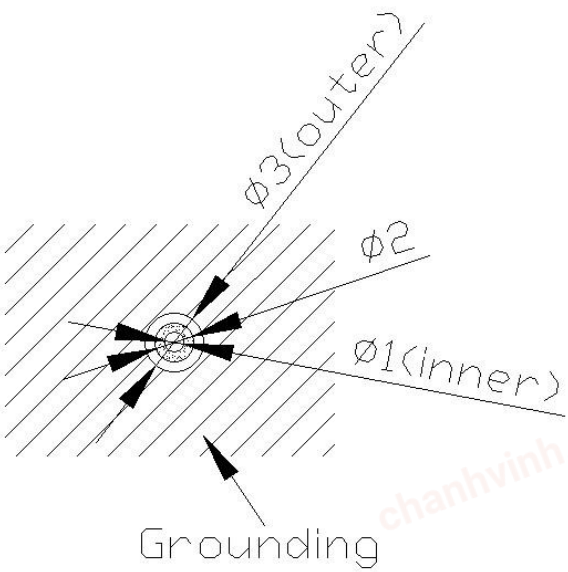

: Pin feed soldering pad
: Grounding
Unit : mm

In the effort to improve our products, we reserve the right to make changes judged to be necessary.
CONFIDENTIAL AND PROPRIETARY INFORMATION
This document contains confidential and proprietary information of Pulse Electronics, Inc. (Pulse) and is protected by copyright, trade secret and other state and federal laws. Its receipt or possession does not convey any rights to reproduce, disclose its contents, or to manufacture, use or sell anything it may describe. Reproduction, disclosure or use without specific written authorization of Pulse is strictly forbidden.

RoHS COMPLIANT

chanhvinh.com

Pulse | LARSEN Antennas
A YAGEO Company

TECHNICAL DATA SHEET

Description: 18184+25254 GNSS&L2L5 Stack Patch Antenna

PART NUMBER : ANT1825BS0XTGN25S

RETURN LOSS

L2 & L5

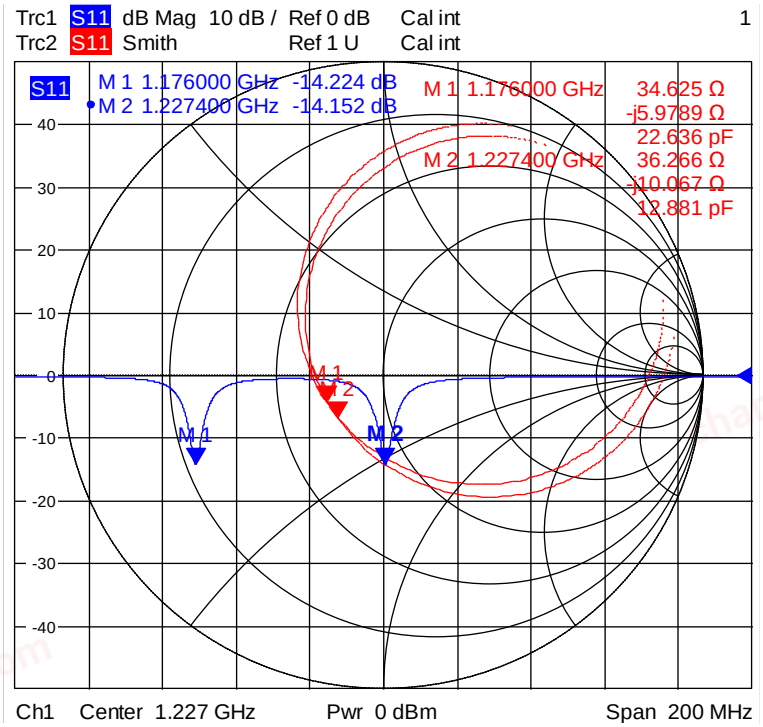

GNSS

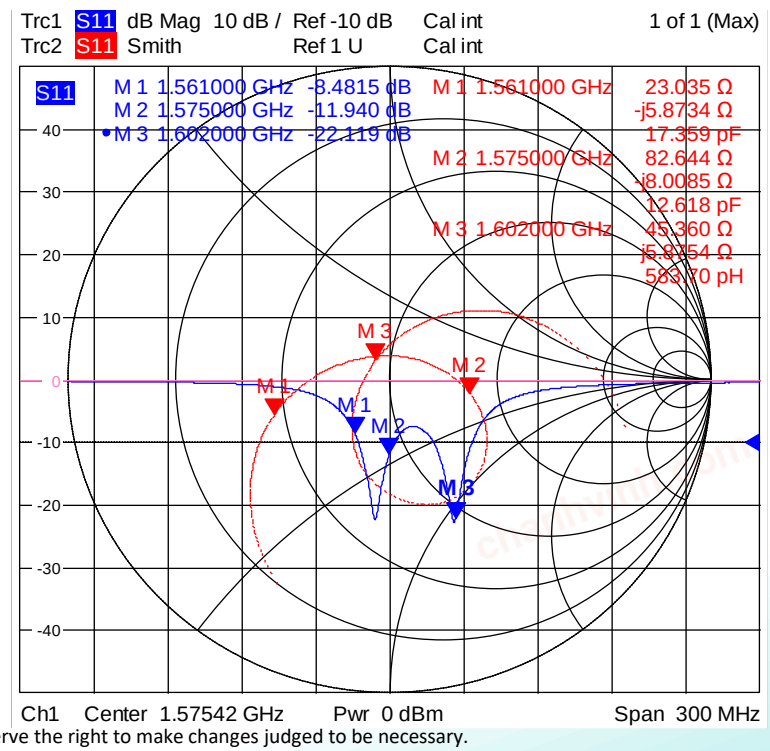

In the effort to improve our products, we reserve the right to make changes judged to be necessary.
CONFIDENTIAL AND PROPRIETARY INFORMATION
This document contains confidential and proprietary information of Pulse Electronics, Inc. (Pulse) and is protected by copyright, trade secret and other state and federal laws. Its receipt or possession does not convey any rights to reproduce, disclose its contents, or to manufacture, use or sell anything it may describe. Reproduction, disclosure or use without specific written authorization of Pulse is strictly forbidden.

RoHS COMPLIANT

chanhvinh.com

Pulse | LARSEN Antennas
A YAGEO Company

TECHNICAL DATA SHEET

Description: 18184+25254 GNSS&L2L5 Stack Patch Antenna

PART NUMBER : ANT1825BS0XTGN25S

RADIATION PATTERN

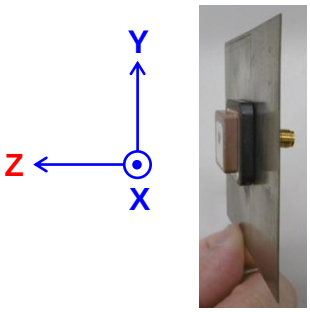

Evaluation board and XYZ direction

L5-1176MHz

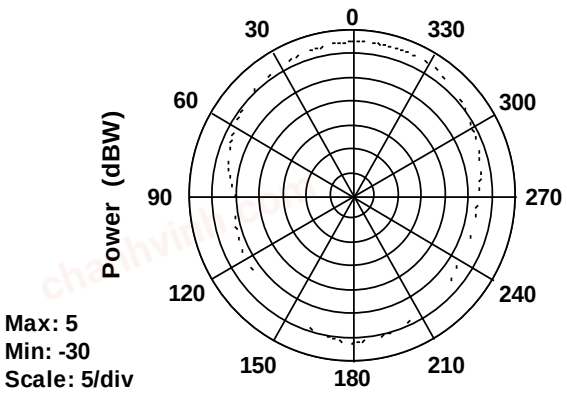

2D x-z plane pattern

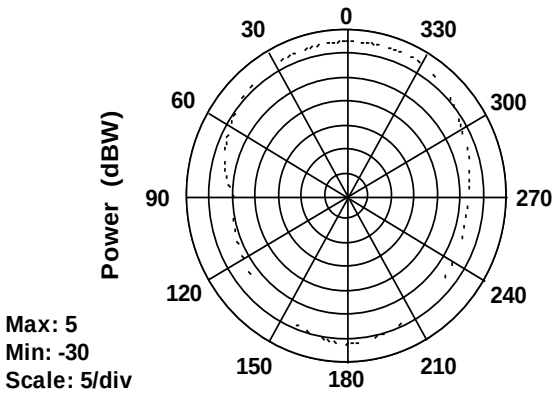

2D y-z plane pattern

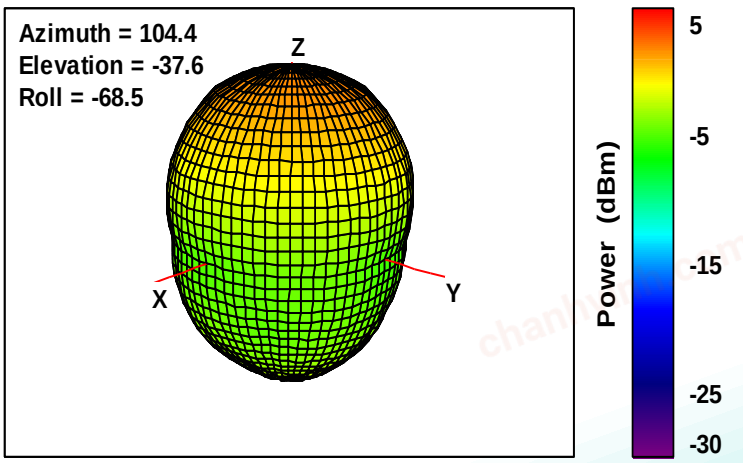

3D radiation pattern

In the effort to improve our products, we reserve the right to make changes judged to be necessary.
CONFIDENTIAL AND PROPRIETARY INFORMATION
This document contains confidential and proprietary information of Pulse Electronics, Inc. (Pulse) and is protected by copyright, trade secret and other state and federal laws. Its receipt or possession does not convey any rights to reproduce, disclose its contents, or to manufacture, use or sell anything it may describe. Reproduction, disclosure or use without specific written authorization of Pulse is strictly forbidden.

chanhvinh.com

Pulse | LARSEN Antennas
A YAGEO Company

TECHNICAL DATA SHEET

Description: 18184+25254 GNSS&L2L5 Stack Patch Antenna

PART NUMBER : ANT1825BS0XTGN25S

RADIATION PATTERN

L2-1227MHz

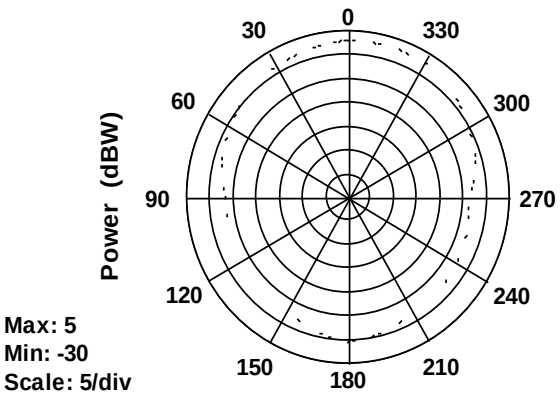

2D x-z plane pattern

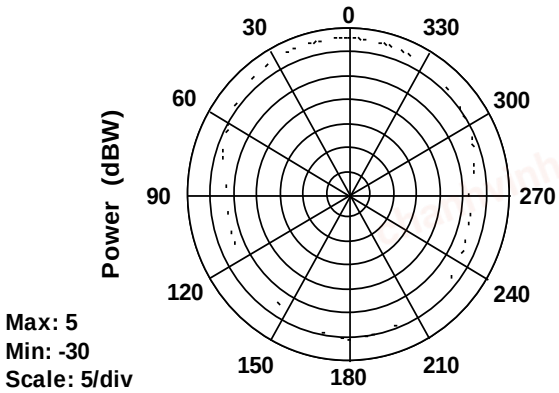

2D y-z plane pattern

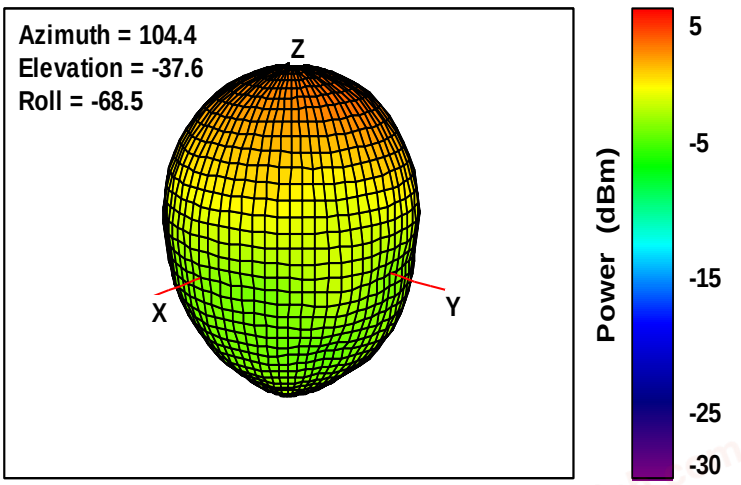

3D radiation pattern

In the effort to improve our products, we reserve the right to make changes judged to be necessary.
CONFIDENTIAL AND PROPRIETARY INFORMATION
This document contains confidential and proprietary information of Pulse Electronics, Inc. (Pulse) and is protected by copyright, trade secret and other state and federal laws. Its receipt or possession does not convey any rights to reproduce, disclose its contents, or to manufacture, use or sell anything it may describe. Reproduction, disclosure or use without specific written authorization of Pulse is strictly forbidden.

chanhvinh.com

Pulse | LARSEN Antennas
A YAGEO Company

TECHNICAL DATA SHEET

Description: 18184+25254 GNSS&L2L5 Stack Patch Antenna

PART NUMBER : ANT1825BS0XTGN25S

RADIATION PATTERN

GNSS-1561MHz

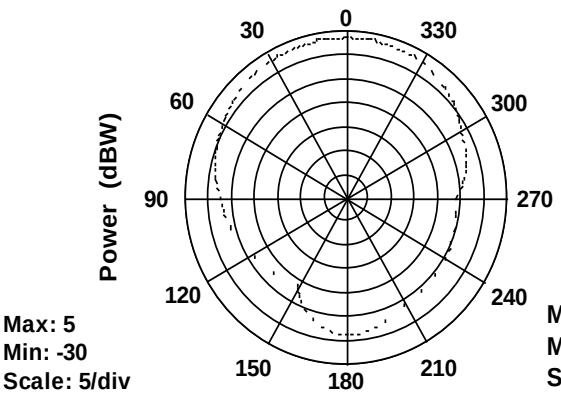

2D x-z plane pattern

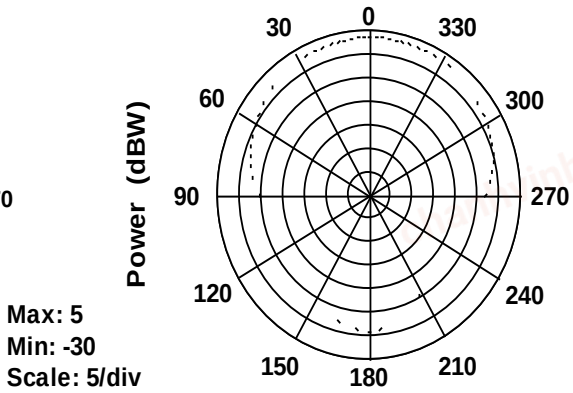

2D y-z plane pattern

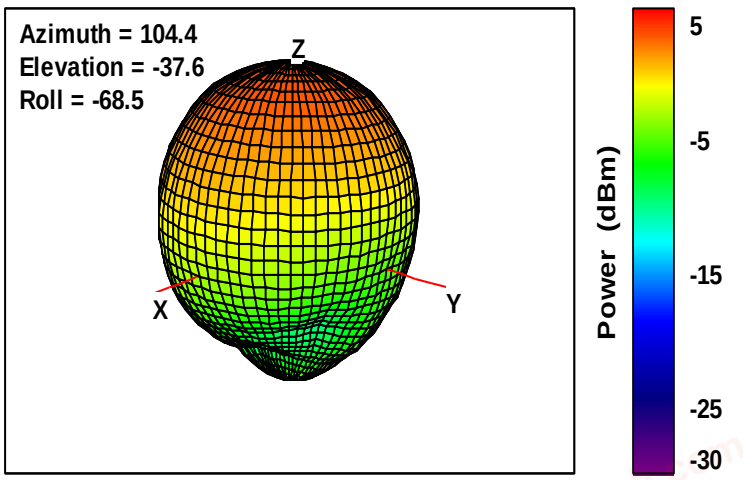

3D radiation pattern

In the effort to improve our products, we reserve the right to make changes judged to be necessary.
CONFIDENTIAL AND PROPRIETARY INFORMATION
This document contains confidential and proprietary information of Pulse Electronics, Inc. (Pulse) and is protected by copyright, trade secret and other state and federal laws. Its receipt or possession does not convey any rights to reproduce, disclose its contents, or to manufacture, use or sell anything it may describe. Reproduction, disclosure or use without specific written authorization of Pulse is strictly forbidden.

chanhvinh.com

Pulse | LARSEN Antennas
A YAGEO Company

TECHNICAL DATA SHEET

Description: 18184+25254 GNSS&L2L5 Stack Patch Antenna

PART NUMBER : ANT1825BS0XTGN25S

RADIATION PATTERN

GNSS-1575MHz

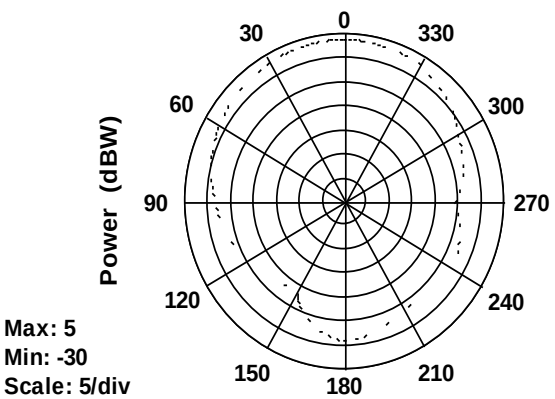

2D x-z plane pattern

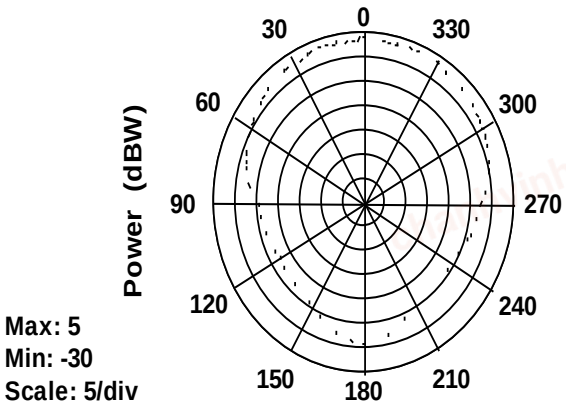

2D y-z plane pattern

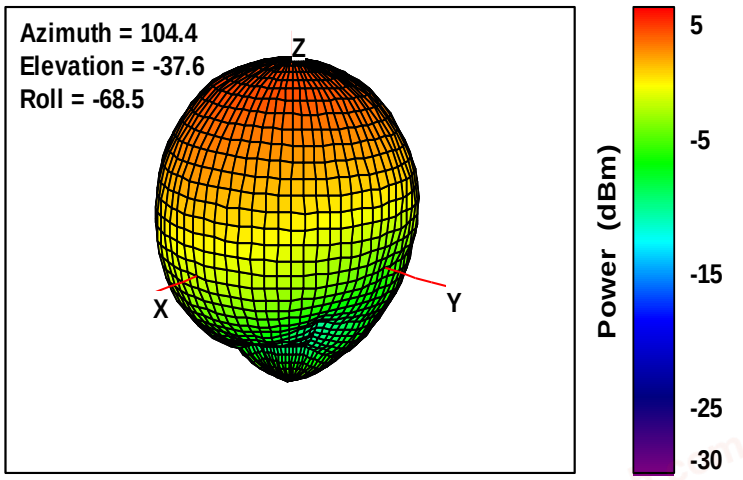

3D radiation pattern

In the effort to improve our products, we reserve the right to make changes judged to be necessary.
CONFIDENTIAL AND PROPRIETARY INFORMATION
This document contains confidential and proprietary information of Pulse Electronics, Inc. (Pulse) and is protected by copyright, trade secret and other state and federal laws. Its receipt or possession does not convey any rights to reproduce, disclose its contents, or to manufacture, use or sell anything it may describe. Reproduction, disclosure or use without specific written authorization of Pulse is strictly forbidden.

chanhvinh.com

Pulse | LARSEN Antennas
A YAGEO Company

TECHNICAL DATA SHEET

Description: 18184+25254 GNSS&L2L5 Stack Patch Antenna

PART NUMBER : ANT1825BS0XTGN25S

RADIATION PATTERN

GNSS-1602MHz

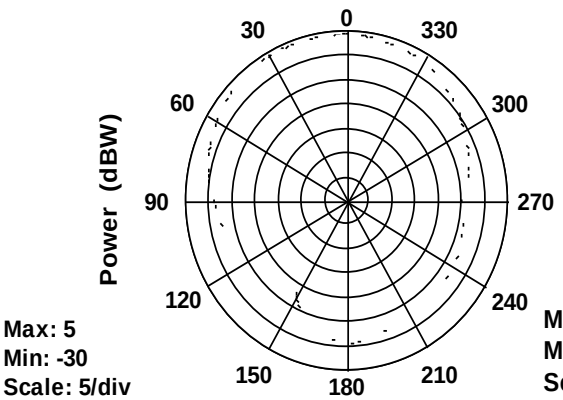

2D x-z plane pattern

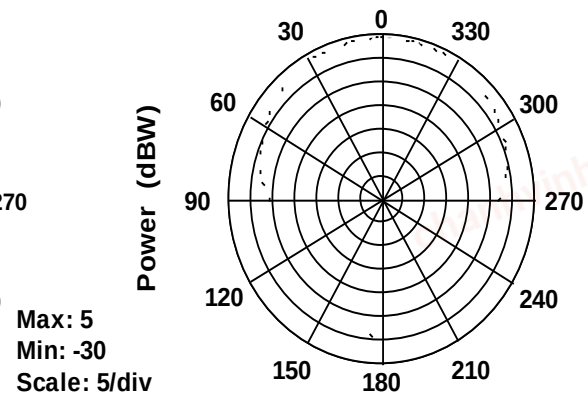

2D y-z plane pattern

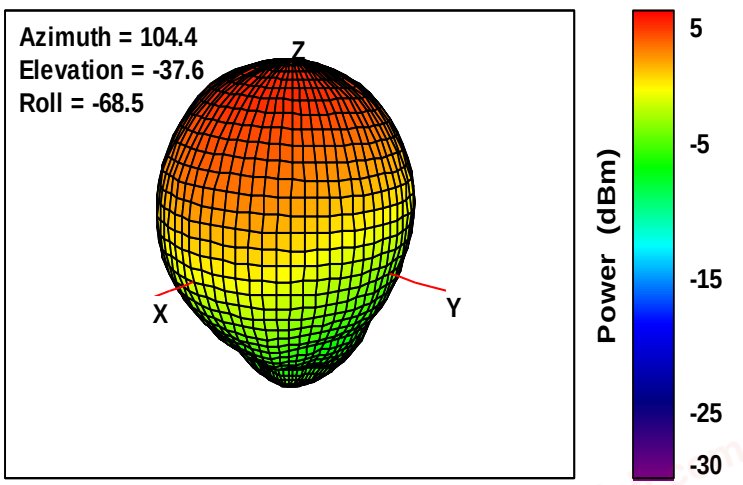

3D radiation pattern

In the effort to improve our products, we reserve the right to make changes judged to be necessary.
CONFIDENTIAL AND PROPRIETARY INFORMATION
This document contains confidential and proprietary information of Pulse Electronics, Inc. (Pulse) and is protected by copyright, trade secret and other state and federal laws. Its receipt or possession does not convey any rights to reproduce, disclose its contents, or to manufacture, use or sell anything it may describe. Reproduction, disclosure or use without specific written authorization of Pulse is strictly forbidden.

chanhvinh.com

Pulse | LARSEN Antennas
A YAGEO Company

TECHNICAL DATA SHEET

Description: 18184+25254 GNSS&L2L5 Stack Patch Antenna

PART NUMBER : ANT1825BS0XTGN25S

REVISION HISTORY

Revision	Date	Description
Version 1	Jun. 24	- New issue

chanhvinh.com

In the effort to improve our products, we reserve the right to make changes judged to be necessary.
CONFIDENTIAL AND PROPRIETARY INFORMATION
This document contains confidential and proprietary information of Pulse Electronics, Inc. (Pulse) and is protected by copyright, trade secret and other state and federal laws. Its receipt or possession does not convey any rights to reproduce, disclose its contents, or to manufacture, use or sell anything it may describe. Reproduction, disclosure or use without specific written authorization of Pulse is strictly forbidden.

RoHS COMPLIANT